7SR210 Non-Directional Relay
7SR220 Directional Relay
Applications Guide

(Software Version 2435H85008R7a-7a) (7SR210)
(Software Version 2435H85009R7a-7a) (7SR220)

The copyright and other intellectual property rights in this document, and in any model or article produced from it (and including any registered or unregistered design rights) are the property of Siemens Protection Devices Limited. No part of this document shall be reproduced or modified or stored in another form, in any data retrieval system, without the permission of Siemens Protection Devices Limited, nor shall any model or article be reproduced from this document unless Siemens Protection Devices Limited consent.

While the information and guidance given in this document is believed to be correct, no liability shall be accepted for any loss or damage caused by any error or omission, whether such error or omission is the result of negligence or any other cause. Any and all such liability is disclaimed.

©2011 Siemens Protection Devices Limited

SIEMENS
siemens-russia.com

Document Release History

This document is issue 2011/05.

2011/05	First issue

©2011 Siemens Protection Devices Limited
SIEMENS
siemens-russia.com

Contents

Document Release History **2**

Section 1: Common Functions **5**

1.1 Multiple Settings Groups 5
1.2 Binary Inputs 6
1.3 Binary Outputs 9
1.4 LEDs 9

Section 2: Protection Functions **11**

2.1 Time delayed overcurrent (51/51G/51N) 11
2.1.1 Selection of Overcurrent Characteristics 12
2.1.2 Reset Delay 13
2.2 Voltage dependent overcurrent (51V) 14
2.3 Cold Load Settings (51c) 14
2.4 Instantaneous Overcurrent (50/50G/50N) 15
2.4.1 Blocked Overcurrent Protection Schemes 15
2.5 Sensitive Earth-fault Protection (50SEF) 17
2.6 Directional Protection (67) 18
2.7 Directional Earth-Fault (50/51G, 50/51N, 51/51SEF) 21
2.8 High Impedance Restricted Earth Fault Protection (64H) 22
2.9 Negative Phase Sequence Overcurrent (46NPS) 24
2.10 Undercurrent (37) 24
2.11 Thermal Overload (49) 24
2.12 Under/Over Voltage Protection (27/59) 25
2.13 Neutral Overvoltage (59N) 26
2.13.1 Application with Capacitor Cone Units 27
2.13.2 Derived NVD Voltage 27
2.14 Negative Phase Sequence Overvoltage (47) 27
2.15 Under/Over Frequency (81) 28

Section 3: CT Requirements **29**

3.1 CT Requirements for Overcurrent and Earth Fault Protection 29
3.1.1 Overcurrent Protection CTs 29
3.1.2 Earth Fault Protection CTs 29
3.2 CT Requirements for High Impedance Restricted Earth Fault Protection 29

Section 4: Control Functions **30**

4.1 Auto-reclose Applications 30
4.1.1 Auto-Reclose Example 1 31
4.1.2 Auto-Reclose Example 2 (Use of Quicklogic with AR) 32
4.2 Quick Logic Applications 33
4.2.1 Auto-Changeover Scheme Example 33

Section 5: Supervision Functions **34**

5.1 Circuit-Breaker Fail (50BF) 34
5.1.1 Settings Guidelines 34
5.2 Current Transformer Supervision (60CTS) 36
5.3 Voltage Transformer Supervision (60VTS) 37
5.4 Trip-Circuit Supervision (74TCS) 38
5.4.1 Trip Circuit Supervision Connections 38
5.5 Inrush Detector (81HBL2) 40
5.6 Broken Conductor / Load Imbalance (46BC) 40
5.7 Circuit-Breaker Maintenance 40

©2011 Siemens Protection Devices Limited

SIEMENS
siemens-russia.com

List of Figures

Figure 1.1-1 Example Use of Alternative Settings Groups....5
Figure 1.2-1 Example of Transformer Alarm and Trip Wiring 6
Figure 1.2-2 – Binary Input Configurations Providing Compliance with EATS 48-4 Classes ESI 1 and ESI 2 8
Figure 1.4-1 LED configuration via the LED Matrix tab....9
Figure 1.4-2 LED configuration via the Settings \ OUTPUT CONFIG \ LED CONFIG menu 10
Figure 2.1-1 IEC NI Curve with Time Multiplier and Follower DTL Applied 11
Figure 2.1-2 IEC NI Curve with Minimum Operate Time Setting Applied 12
Figure 2.1-3 Reset Delay....13
Figure 2.4-1 General Form of DTL Operate Characteristic....15
Figure 2.4-2 Blocking Scheme Using Instantaneous Overcurrent Elements 16
Figure 2.5-1 Sensitive Earth Fault Protection Application....17
Figure 2.6-1 Directional Characteristics 18
Figure 2.6-2 Phase Fault Angles....18
Figure 2.6-3 Application of Directional Overcurrent Protection 19
Figure 2.6-4 Feeder Fault on Interconnected Network 20
Figure 2.7-1 Earth Fault Angles 21
Figure 2.8-1 Balanced and Restricted Earth-fault protection of Transformers....22
Figure 2.8-2 Composite Overcurrent and Restricted Earth-fault Protection 23
Figure 2.11-1 Thermal Overload Heating and Cooling Characteristic....24
Figure 2.13-1 NVD Application....26
Figure 2.13-2 NVD Protection Connections 26
Figure 2.15-1 Load Shedding Scheme Using Under-Frequency Elements 28
Figure 4.1-1 Sequence Co-ordination 30
Figure 4.1-2 Example of Logic Application....32
Figure 4.2-1 Example Use of Quick Logic....33
Figure 5.1-1 - Circuit Breaker Fail 34
Figure 5.1-2 - Single Stage Circuit Breaker Fail Timing....35
Figure 5.1-3 - Two Stage Circuit Breaker Fail Timing 35
Figure 5.4-1:Trip Circuit Supervision Scheme 1 (H5) 38
Figure 5.4-2:Trip Circuit Supervision Scheme 2 (H6) 39
Figure 5.4-3:Trip Circuit Supervision Scheme 3 (H7) 39

List of Tables

Table 2-1 Application of IDMTL Characteristics 13
Table 5-2 Determination of CT Failure (1 or 2 Phases) 36
Table 5-3 Determination of VT Failure (1 or 2 Phases) 37
Table 5-4 Determination of VT Failure (3 Phases) 37
Table 5-5 Magnetic Inrush Bias 40

©2011 Siemens Protection Devices Limited
SIEMENS
siemens-russia.com

Section 1: Common Functions

1.1 Multiple Settings Groups

Alternate settings groups can be used to reconfigure the relay during significant changes to system conditions e.g.

Primary plant switching in/out.

Summer/winter or day/night settings.

switchable earthing connections.

Loss of Grid connection (see below)

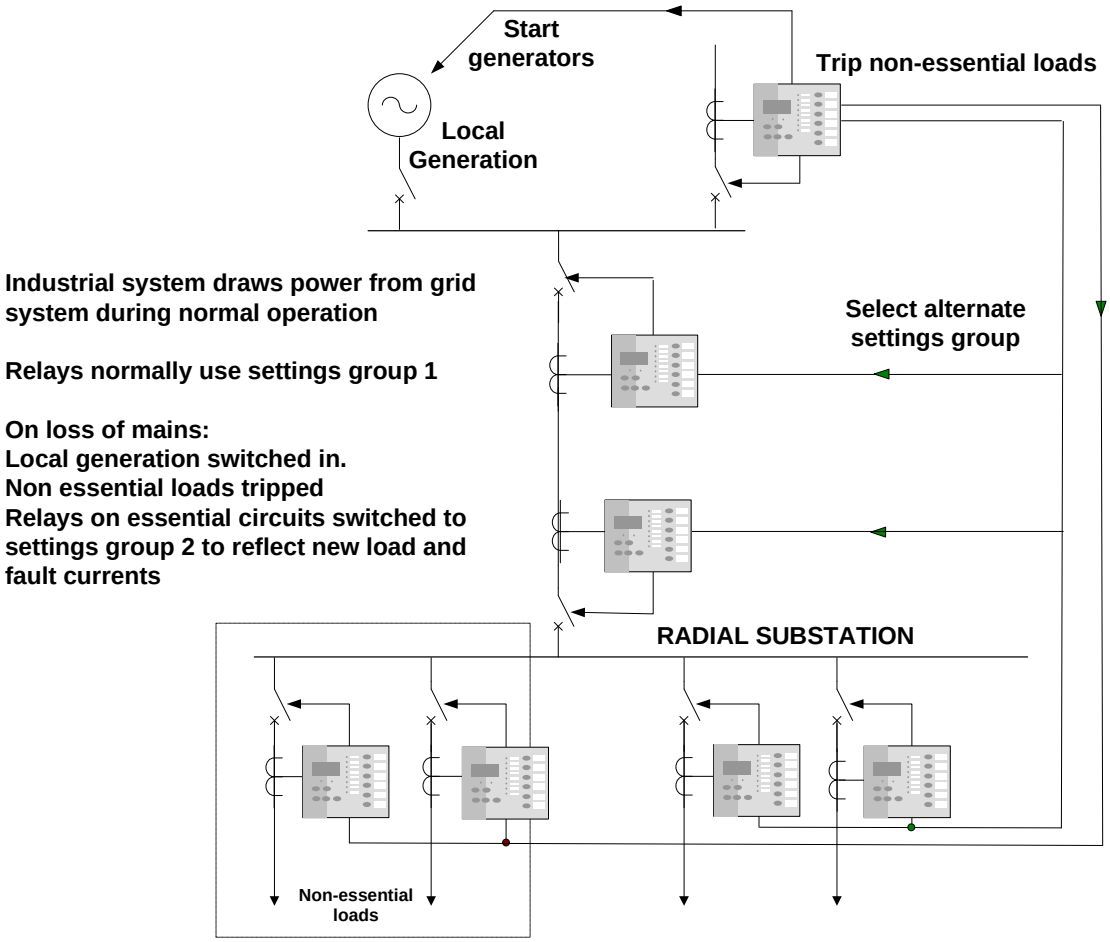

Figure 1.1-1 Example Use of Alternative Settings Groups

SIEMENS
siemens-russia.com

1.2 Binary Inputs

Each Binary Input (BI) can be programmed to operate one or more of the relay functions, LEDs or output relays. These could be used to bring such digital signals as Inhibits for protection elements, the trip circuit supervision status, autoreclose control signals etc. into the Relay.

Alarm and Tripping Inputs

A common use of binary inputs is to provide indication of alarm or fault conditions e.g. transformer Buchholz Gas or Buchholz Surge conditions. The Binary Inputs are mapped to LED(s), waveform storage trigger and binary outputs. Note that transformer outputs which require high speed tripping, such as a Buchholz Surge, should be wired to a binary input to provide LED indication and also have a parallel connection wired to directly trip the circuit via a blocking diode, see fig. 1.2-1:

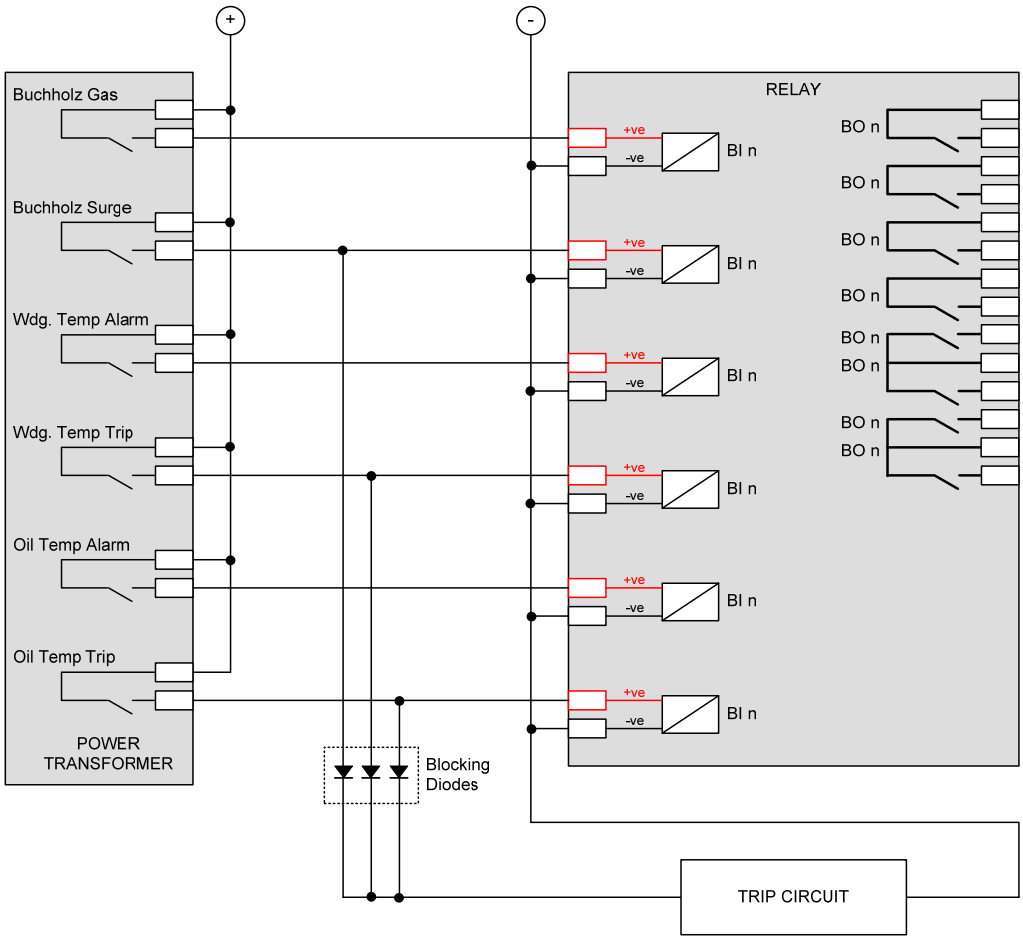

Figure 1.2-1 Example of Transformer Alarm and Trip Wiring

©2011 Siemens Protection Devices Limited
SIEMENS
siemens-russia.com

The Effects of Capacitance Current

The binary inputs have a low minimum operate current and may be set for instantaneous operation. Consideration should be given to the likelihood of mal-operation due to capacitance current. Capacitance current can flow through the BI for example if an earth fault occurs on the dc circuits associated with the relay. The binary inputs will be less likely to mal-operate if they:

1. Have both the positive and negative switched (double-pole switched).
2. Do not have extensive external wiring associated with them e.g. if the wiring is confined to the relay room.

Where a binary input is both used to influence a control function (e.g. provide a tripping function) and it is considered to be susceptible to mal-operation the external circuitry can be modified to provide immunity to such disturbances, see fig 1.2-2.

AC Rejection

The default pick-up time delay of 20ms provides immunity to ac current e.g. induced from cross site wiring.

©2011 Siemens Protection Devices Limited

SIEMENS
siemens-russia.com

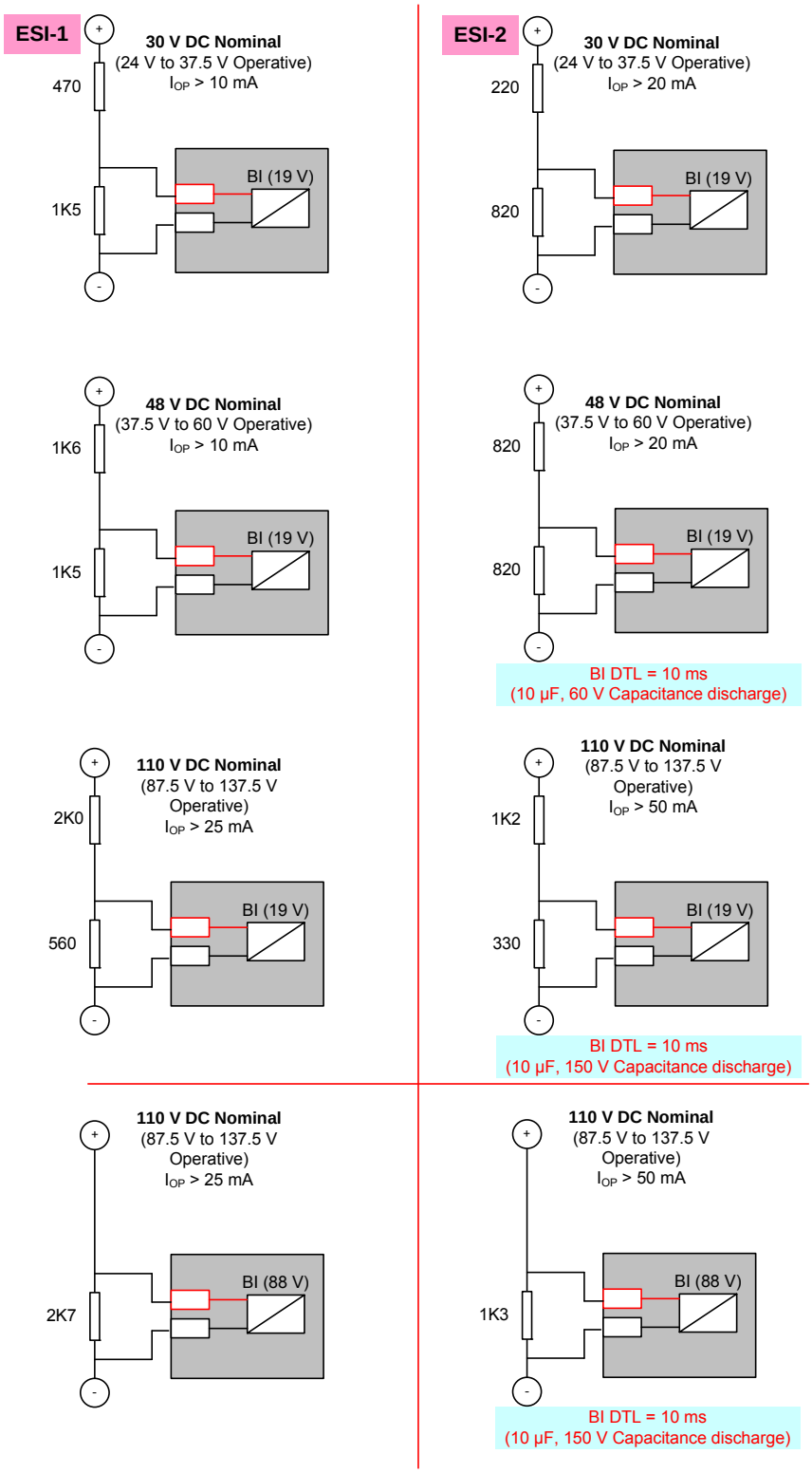

Resistor power ratings:	30 V DC Nominal	>3 W
	48 V DC Nominal	>3 W
	110 V DC Nominal	>10 W (ESI-1)
	110 V DC Nominal	>20 W (ESI-2)

Resistors must be wired with crimped connections as they may run hot

Figure 1.2-2 – Binary Input Configurations Providing Compliance with EATS 48-4 Classes ESI 1 and ESI 2

©2011 Siemens Protection Devices Limited
SIEMENS
siemens-russia.com

1.3 Binary Outputs

Binary Outputs are mapped to output functions by means of settings. These could be used to bring out such digital signals as trips, a general pick-up, plant control signals etc.

All Binary Outputs are Trip rated

Each can be defined as Self or Hand Reset. Self-reset contacts are applicable to most protection applications. Hand-reset contacts are used where the output must remain active until the user expressly clears it e.g. in a control scheme where the output must remain active until some external feature has correctly processed it.

Case contacts 26 and 27 will automatically short-circuit when the relay is withdrawn from the case. This can be used to provide an alarm that the Relay is out of service.

Notes on Self Reset Outputs

With a failed breaker condition the relay may remain operated until current flow in the primary system is interrupted by an upstream device. The relay will then reset and attempt to interrupt trip coil current flowing through an output contact. Where this level is above the break rating of the output contact an auxiliary relay with heavy-duty contacts should be utilised.

1.4 LEDs

Output-function LEDs are mapped to output functions by means of settings. These could be used to display such digital signals as trips, a general pick-up, plant control signals etc.

User Defined Function Key LEDs are used to indicate the status of Function Key operation. These do not relate directly to the operation of the Function Key but rather to its consequences. If a Function Key is depressed to close a Circuit-Breaker, the associated LED would show the status of the Circuit-Breaker closed Binary Input.

Each LED can be defined as Self or Hand Reset. Hand reset LEDs are used where the user is required to expressly acknowledge the change in status e.g. critical operations such as trips or system failures. Self-reset LEDs are used to display features which routinely change state, such as Circuit-Breaker open or close.

The status of hand reset LEDs is retained in capacitor-backed memory in the event of supply loss.

Each LED can be assigned as red, yellow or green in colour. There are two methods for doing this: -

1) In the LED Matrix tab, to assign the LED as a red colour select a box on the red row. To assign the LED as a green colour select a box on the green row. To assign the LED as a yellow colour, select boxes on both the red and green rows.

   NB: If there are no boxes selected the LED will not illuminate.

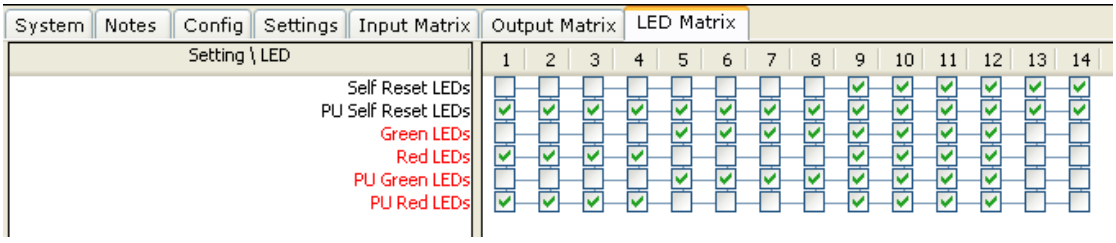

Figure 1.4-1 LED configuration via the LED Matrix tab

SIEMENS
siemens-russia.com

In the OUTPUT CONFIG\LED CONFIG menu in the Settings tab, to assign the required LED as a particular colour, either red or green, type the LED number in the appropriate row. To assign the required LED as a yellow colour, type the LED number in both red and green rows.

NB: If a LED number is not assigned that particular LED will not illuminate.

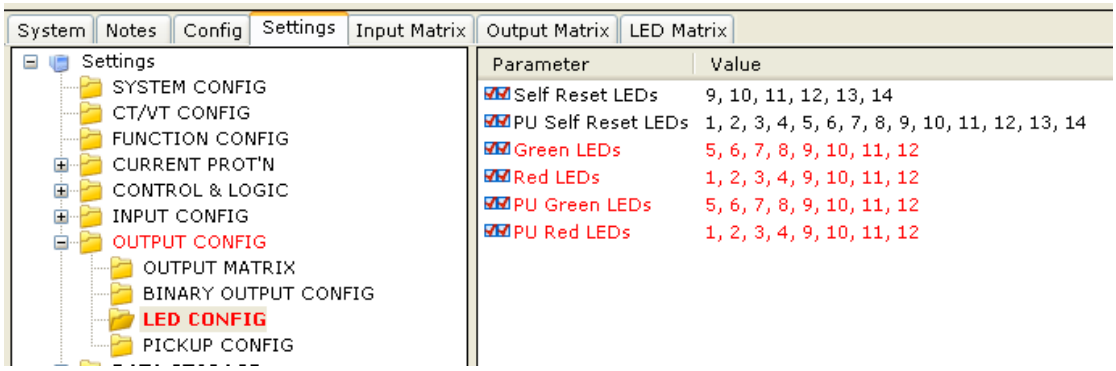

Figure 1.4-2 LED configuration via the Settings \ OUTPUT CONFIG \ LED CONFIG menu

©2011 Siemens Protection Devices Limited
SIEMENS
siemens-russia.com

Section 2: Protection Functions

2.1 Time delayed overcurrent (51/51G/51N)

The 51-n characteristic element provides a number of time/current operate characteristics. The element can be defined as either an Inverse Definite Minimum Time Lag (IDMTL) or Definite Time Lag (DTL) characteristic. If an IDMTL characteristic is required, then IEC, ANSI/IEEE and a number of manufacturer specific curves are supported.

IDMTL characteristics are defined as “Inverse” because their tripping times are inversely proportional to the Fault Current being measured. This makes them particularly suitable to grading studies where it is important that only the Relay(s) closest to the fault operate. Discrimination can be achieved with minimised operating times.

To optimise the grading capability of the relay additional time multiplier, ‘Follower DTL’ (Fig. 2.1-1) or ‘Minimum Operate Time’ (Fig. 2.1-2) settings can be applied.

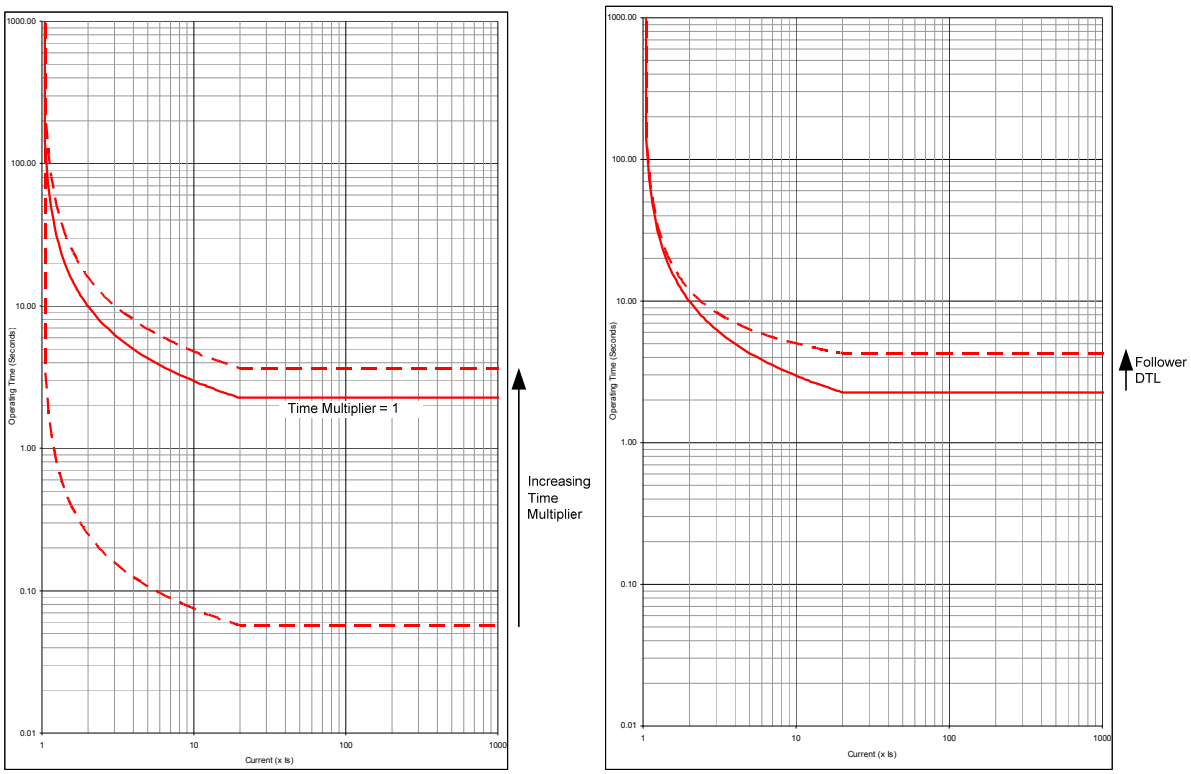

Figure 2.1-1 IEC NI Curve with Time Multiplier and Follower DTL Applied

SIEMENS
siemens-russia.com

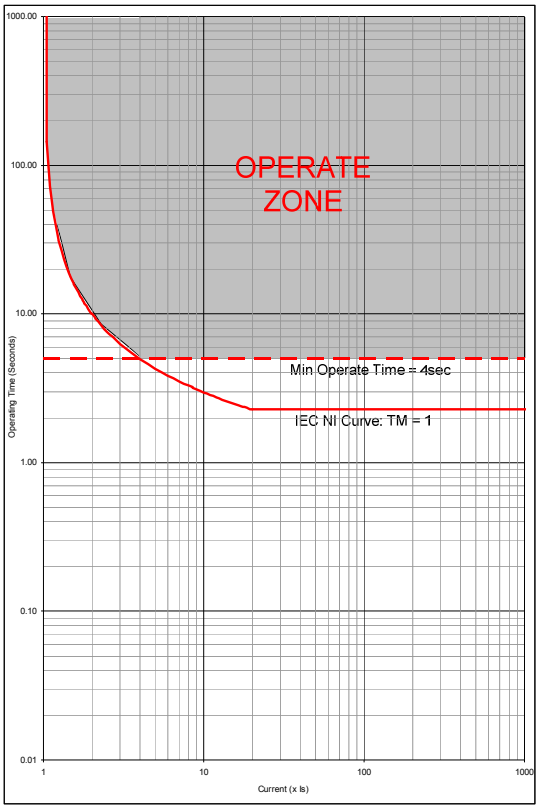

Figure 2.1-2 IEC NI Curve with Minimum Operate Time Setting Applied

To increase sensitivity, dedicated Earth fault elements are used. There should be little or no current flowing to earth in a healthy system so such relays can be given far lower pick-up levels than relays which detect excess current (> load current) in each phase conductor. Such dedicated earth fault relays are important where the fault path to earth is a high-resistance one (such as in highly arid areas) or where the system uses high values of earthing resistor / reactance and the fault current detected in the phase conductors will be limited.

2.1.1 Selection of Overcurrent Characteristics

Each pole has two independent over-current characteristics. Where required the two curves can be used:

To produce a composite curve

To provide a two stage tripping scheme

Where one curve is to be directionalised in the forward direction the other in the reverse direction.

The characteristic curve shape is selected to be the same type as the other relays on the same circuit or to grade with items of plant e.g. fuses or earthing resistors.

The application of IDMTL characteristic is summarised in the following table:

©2011 Siemens Protection Devices Limited
SIEMENS
siemens-russia.com

OC/EF Curve Characteristic	Application
IEC Normal Inverse (NI) ANSI Moderately Inverse (MI)	Generally applied
IEC Very Inverse (VI) ANSI Very Inverse (VI)	Used with high impedance paths where there is a significant difference between fault levels at protection points
IEC Extreme Inversely (EI) ANSI Extremely Inverse (EI)	Grading with Fuses
IEC Long Time Inverse (LTI)	Used to protect transformer earthing resistors having long withstand times
Recloser Specific	Use when grading with specific recloser

Table 2-1 Application of IDMTL Characteristics

2.1.2 Reset Delay

The increasing use of plastic insulated cables, both conventionally buried and aerial bundled conductors, have given rise to the number of flashing intermittent faults on distribution systems. At the fault position, the plastic melts and temporarily reseals the faulty cable for a short time after which the insulation fails again. The same phenomenon has occurred in compound-filled joint boxes or on 'clashing' overhead line conductors. The repeating process of the fault can cause electromechanical disc relays to "ratchet" up and eventually trip the faulty circuit if the reset time of the relay is longer than the time between successive faults.

To mimic an electromechanical relay the relay can be user programmed for an ANSI DECAYING characteristic when an ANSI operate characteristic is applied. Alternatively a DTL reset (0 to 60 seconds) can be used with other operate characteristics.

For protection of cable feeders, it is recommended that a 60 second DTL reset be used.

On overhead line networks, particularly where reclosers are incorporated in the protected system, instantaneous resetting is desirable to ensure that, on multiple shot reclosing schemes, correct grading between the source relays and the relays associated with the reclosers is maintained.

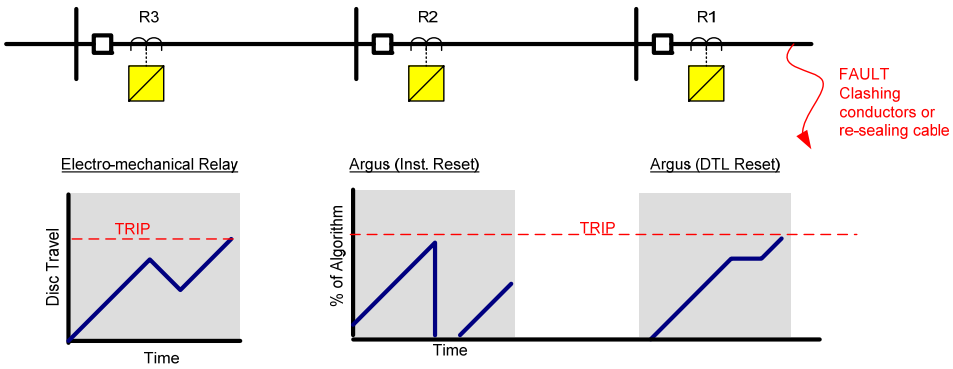

Figure 2.1-3 Reset Delay

SIEMENS
siemens-russia.com

2.2 Voltage dependent overcurrent (51V)

Reduced voltage can indicate a fault on the system, it can be used to make the 51 elements more sensitive.

Typically Voltage Dependent Over-current (51V) is applied to:

Transformer Incomers: Where the impedance of the transformer limits fault current the measured voltage level can be used to discriminate between load and fault current.

Long lines: Where the impedance of the line limits fault current the measured voltage level can be used to discriminate between load and fault current.

Generator circuits: When a Generator is subjected to a short circuit close to its terminals the short-circuit current follows a complex profile. After the initial "sub-transient" value, generally in the order of 7 to 10 times full load current, it falls rapidly (around 10 to 20ms) to the "transient" value. This is still about 5 to 7 times full load and would be sufficient to operate the protection's over-current elements. However the effect on armature reactance of the highly inductive short-circuit current is to increase significantly the internal impedance to the synchronous reactance value. If the Automatic Voltage Regulation (AVR) system does not respond to increase the excitation, the fault current will decay over the next few seconds to a value below the full load current. This is termed the steady state fault current, determined by the Generator's synchronous reactance (and pre-fault excitation). It will be insufficient to operate the protection's over-current elements and the fault will not be detected. Even if AVR is active, problems may still be encountered. The AVR will have a declared minimum sustained fault current and this must be above the protection over-current settings. Close-in short circuit faults may also cause the AVR to reach its safety limits for supplying maximum excitation boost, in the order of several seconds, and this will result in AVR internal protection devices such as diode fuses to start operating. The generator excitation will then collapse, and the situation will be the same as when no AVR was present. The fault may again not be detected.

Current grading remains important since a significant voltage reduction may be seen for faults on other parts of the system. An inverse time operating characteristic must therefore be used.

The VDO Level - the voltage setting below which the more sensitive operating curve applies - must be set low enough to discriminate between short-circuits and temporary voltage dips due to overloads. However, it must also be high enough to cover a range of voltage drops for different circuit configurations, from around 0.6Vn to almost zero. Typically it will be set in the range 0.6 to 0.8Vn.

2.3 Cold Load Settings (51c)

Once a Circuit-Breaker has been open for a period of time ed, higher than normal levels of load current may flow following CB re-closure e.g. heating or refrigeration plant. The size and duration of this current is dependent upon the type of load and the time that the CB is open.

The feature allows the relay to use alternative Shaped Overcurrent (51c) settings when a Cold Load condition is identified. The cold load current and time multiplier settings will normally be set higher than those of the normal overcurrent settings.

The relay will revert to its usual settings (51-n) after elapse of the cold load period. This is determined either by a user set delay, or by the current in all 3-phases falling below a set level (usually related to normal load levels) for a user set period.

©2011 Siemens Protection Devices Limited
SIEMENS
siemens-russia.com

2.4 Instantaneous Overcurrent (50/50G/50N)

Each instantaneous element has an independent setting for pick-up current and a follower definite time lag (DTL) which can be used to provide time grading margins, sequence co-ordination grading or scheme logic. The "instantaneous" description relates to the pick-up of the element rather than its operation.

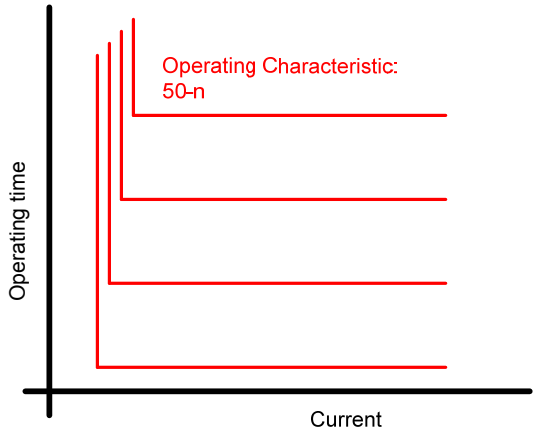

Figure 2.4-1 General Form of DTL Operate Characteristic

Instantaneous elements can be used in current graded schemes where there is a significant difference between the fault current levels at different relay point. The Instantaneous element is set to pick up at a current level above the maximum Fault Current level at the next downstream relay location, and below its own fault current level. The protection is set to operate instantaneously and is often termed 'Highset Overcurrent'. A typical application is the protection of transformer HV connections – the impedance of the transformer ensuring that the LV side has a much lower level of fault current.

The 50-n elements have a very low transient overreach i.e. their accuracy is not appreciably affected by the initial dc offset transient associated with fault inception.

2.4.1 Blocked Overcurrent Protection Schemes

A combination of instantaneous and DTL elements can be used in blocked overcurrent protection schemes. These protection schemes are applied to protect substation busbars or interconnectors etc. Blocked overcurrent protection provides improved fault clearance times when compared against normally graded overcurrent relays.

The blocked overcurrent scheme of busbar protection shown in Figure 2.2-2 illustrates that circuit overcurrent and earth fault protection relays can additionally be configured with busbar protection logic.

The diagram shows a substation. The relay on the incomer is to trip for busbar faults (F1) but remain inoperative for circuit faults (F2).

In this example the overcurrent and earth fault settings for the incomer 50-1 element are set to below the relevant busbar fault levels. 50-1 time delay is set longer than it would take to acknowledge receipt of a blocking signal from an outgoing circuit.

Close up faults on the outgoing circuits will have a similar fault level to busbar faults. As the incomer 50-1 elements would operate for these faults it is necessary to provide a blocking output from the circuit protections. The 50-1 elements of the output relays are given lower current settings than the incomer 50-1 settings, the time delay is set to 0ms. The output is mapped to a contact. The outgoing relay blocking contacts of all circuits are wired in parallel and this wiring is also connected to a BI on the incomer relay. The BI on the incomer relay is mapped to block its 50-1 element.

©2011 Siemens Protection Devices Limited

SIEMENS
siemens-russia.com

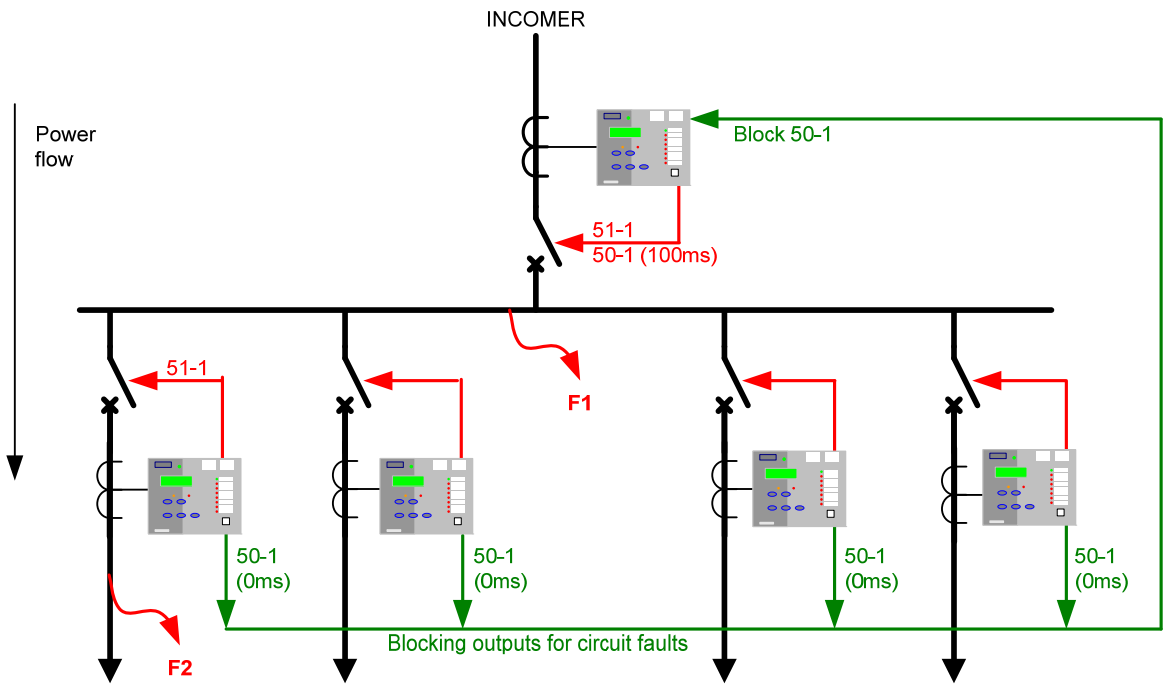

Figure 2.4-2 Blocking Scheme Using Instantaneous Overcurrent Elements

Typically a time delay as low as 50ms on the incomer 50-1 element will ensure that the incomer is not tripped for outgoing circuit faults. However, to include for both equipment tolerances and a safety margin a minimum time delay of 100ms is recommended.

This type of scheme is very cost effective and provides a compromise between back-up overcurrent busbar protection and dedicated schemes of busbar protection.

Instantaneous elements are also commonly applied to autoreclose schemes to grade with downstream circuit reclosers and maximise the probability of a successful auto-reclose sequence – see section 4.

©2011 Siemens Protection Devices Limited
SIEMENS
siemens-russia.com

2.5 Sensitive Earth-fault Protection (50SEF)

Earth fault protection is based on the assumption that fault current levels will be limited only by the earth fault impedance of the line and associated plant. However, it may be difficult to make an effective short circuit to earth due to the nature of the terrain e.g. dry earth, desert or mountains. The resulting earth fault current may therefore be limited to very low levels.

Sensitive earth fault (SEF) protection is used to detect such faults. The RM range of relays have a low burden, so avoiding unacceptable loading of the CTs at low current settings.
SEF provides a backup to the main protection. A DTL characteristic with a time delay of several seconds is typically applied ensuring no interference with other discriminative protections. A relatively long time delay can be tolerated since fault current is low and it is impractical to grade SEF protection with other earth fault protections. Although not suitable for grading with other forms of protection SEF relays may be graded with each other.

Where very sensitive current settings are required then it is preferable to use a core balance CT rather than wire into the residual connection of the line CTs. The turns ratio of a core balance CT can be much smaller than that of phase conductors as they are not related to the rated current of the protected circuit. Since only one core is used, the CT magnetising current losses are also reduced by a factor of 3.

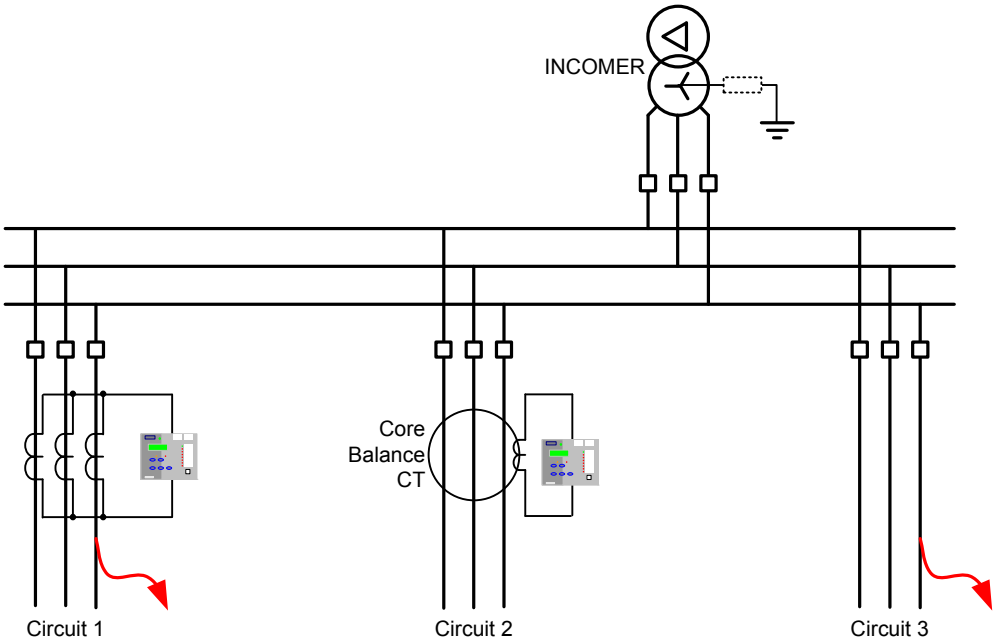

Figure 2.5-1 Sensitive Earth Fault Protection Application

There are limits to how sensitive an SEF relay may be set since the setting must be above any line charging current levels that can be detected by the relay. On occurrence of an out of zone earth fault e.g. on circuit 3 the elevation of sound phase voltage to earth in a non-effectively earthed system can result in a zero sequence current of up 3 times phase charging current flowing through the relay location.

The step change from balanced 3-phase charging currents to this level of zero sequence current includes transients. It is recommended to allow for a transient factor of 2 to 3 when determining the limit of charging current. Based on the above considerations the minimum setting of a relay in a resistance earthed power system is 6 to 9 times the charging current per phase.

©2011 Siemens Protection Devices Limited

SIEMENS
siemens-russia.com

2.6 Directional Protection (67)

Each overcurrent stage can operate for faults in either forward or reverse direction. Convention dictates that forward direction refers to power flow away from the busbar, while reverse direction refers to power flowing towards the busbar.

The directional phase fault elements, 67/50 and 67/51, work with a Quadrature Connection to prevent loss of polarising quantity for close-in phase faults. That is, each of the current elements is directionalised by a voltage derived from the other two phases.

This connection introduces a 90° Phase Shift (Current leading Voltage) between reference and operate quantities which must be allowed for in the Characteristic Angle setting. This is the expected fault angle, sometimes termed the Maximum Torque Angle (MTA) as an analogy to older Electro-mechanical type relays

Example: Expected fault angle is -30º (Current lagging Voltage) so set Directional Angle to: +90° -30° = +60°.

A fault is determined to be in the selected direction if its phase relationship lies within a quadrant +/- 85° either side of the Characteristic Angle setting.

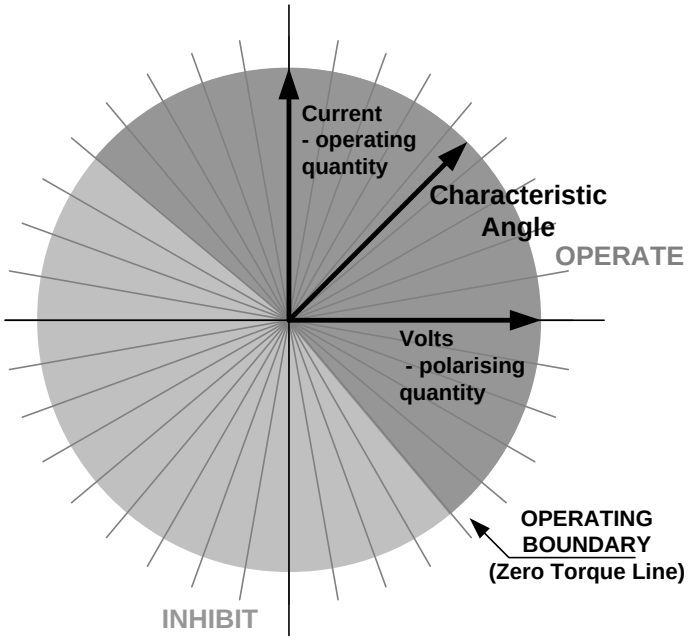

Figure 2.6-1 Directional Characteristics

A number of studies have been made to determine the optimum MTA settings e.g. W.K Sonnemann's paper "A Study of Directional Element Connections for Phase Relays". Figure 2 10 shows the most likely fault angle for phase faults on Overhead Line and Cable circuits.

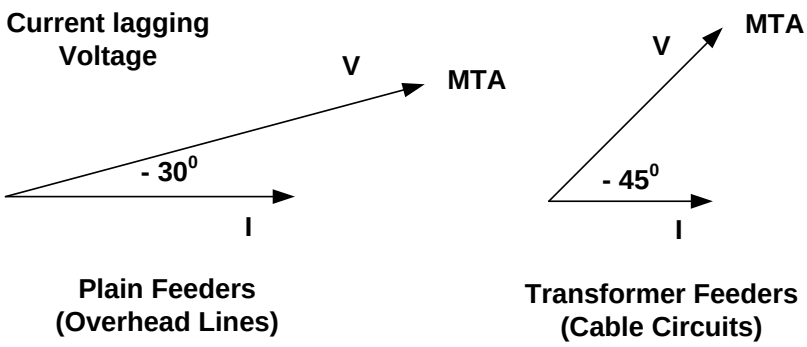

Figure 2.6-2 Phase Fault Angles

©2011 Siemens Protection Devices Limited
SIEMENS
siemens-russia.com

Directional overcurrent elements allow greater fault selectivity than non-directional elements for interconnected systems where fault current can flow in both directions through the relaying point. Consider the network shown in fig. 2.6-3.

The Circuit breakers at A, B, E and G have directional overcurrent relays fitted since fault current can flow in both directions at these points. The forward direction is defined as being away from the busbar and against the direction of normal load current flow. These forward looking IDMTL elements can have sensitive settings applied i.e. low current and time multiplier settings. Note that 7SR22 relays may be programmed with forward, reverse and non-directional elements simultaneously when required by the protection scheme.

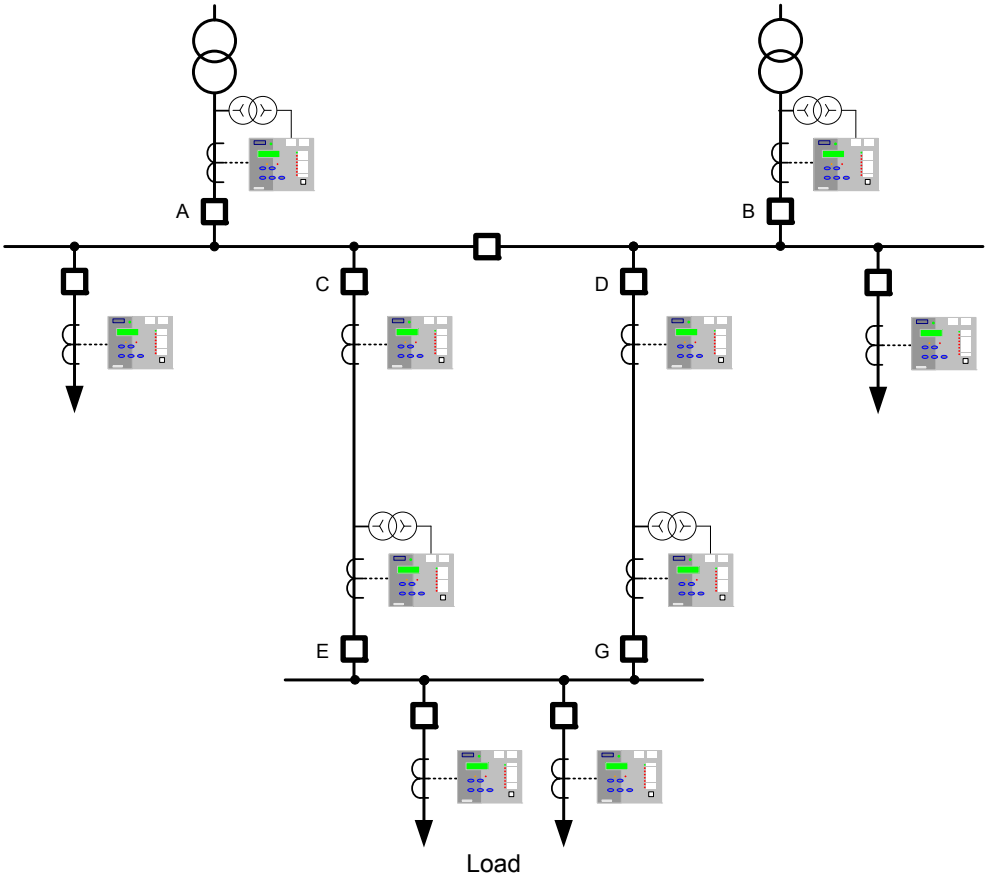

Figure 2.6-3 Application of Directional Overcurrent Protection

SIEMENS
siemens-russia.com

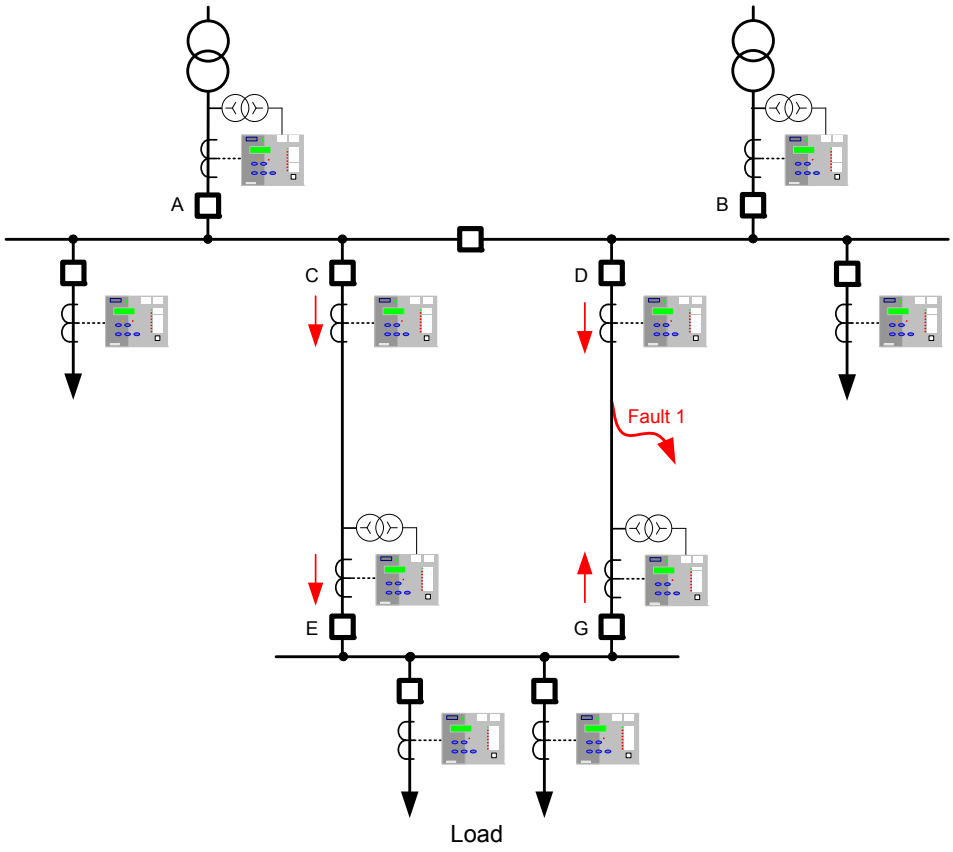

Figure 2.6-4 Feeder Fault on Interconnected Network

Considering the D-G feeder fault shown in fig. 2.6-4: the current magnitude through breakers C and D will be similar and their associated relays will similar prospective operate times. To ensure that only the faulted feeder is isolated G FWD must be set to be faster than C. Relay G will thus Trip first on FWD settings, leaving D to operate to clear the fault. The un-faulted Feeder C-E maintains power to the load.

Relays on circuits C and D at the main substation need not be directional to provide the above protection scheme. However additional directional elements could be mapped to facilitate a blocked overcurrent scheme of busbar protection.

At A and B, forward looking directional elements enable sensitive settings to be applied to detect transformer faults whilst reverse elements can be used to provide back-up protection for the relays at C and D.

By using different settings for forward and reverse directions, closed ring circuits can be set to grade correctly whether fault current flows in a clockwise or counter clockwise direction i.e. it may be practical to use only one relay to provide dual directional protection.

2 Out of 3 Logic

Sensitive settings can be used with directional overcurrent relays since they are directionalised in a way which opposes the flow of normal load current i.e. on the substation incomers as shown on fig. 2.6-4. However on occurrence of transformer HV or feeder incomer phase-phase faults an unbalanced load current may still flow as an un balanced driving voltage is present. This unbalanced load current during a fault may be significant where sensitive overcurrent settings are applied - the load current in one phase may be in the operate direction and above the relay setting.

Where this current distribution may occur then the relay is set to CURRENT PROTECTION>PHASE OVERCURRENT> ***67 2-out-of-3 Logic*** **= ENABLED**

Enabling 2-out-of-3 logic will prevent operation of the directional phase fault protection for a single phase to earth fault. Dedicated earth-fault protection should therefore be used if required.

©2011 Siemens Protection Devices Limited
SIEMENS
siemens-russia.com

2.7 Directional Earth-Fault (50/51G, 50/51N, 51/51SEF)

The directional earth-fault elements, either measure directly or derive from the three line currents the zero sequence current (operate quantity) and compare this against the derived zero phase sequence voltage (polarising quantity). Section 1 of the Technical Manual 'Description of Operation' details the method of measurement. The required setting is entered directly as dictated by the system impedances.

Example: Expected fault angle is -45° (i.e. residual current lagging residual voltage) therefore ***67G Char Angle* = -45°**

However directional earth elements can be selectable to use either ZPS or NPS Polarising. This is to allow for the situation where ZPS voltage is not available; perhaps because a 3-limb VT is being used. Care must be taken as the Characteristic Angle will change if NPS Polarising is used.

Once again the fault angle is completely predictable, though this is a little more complicated as the method of earthing must be considered.

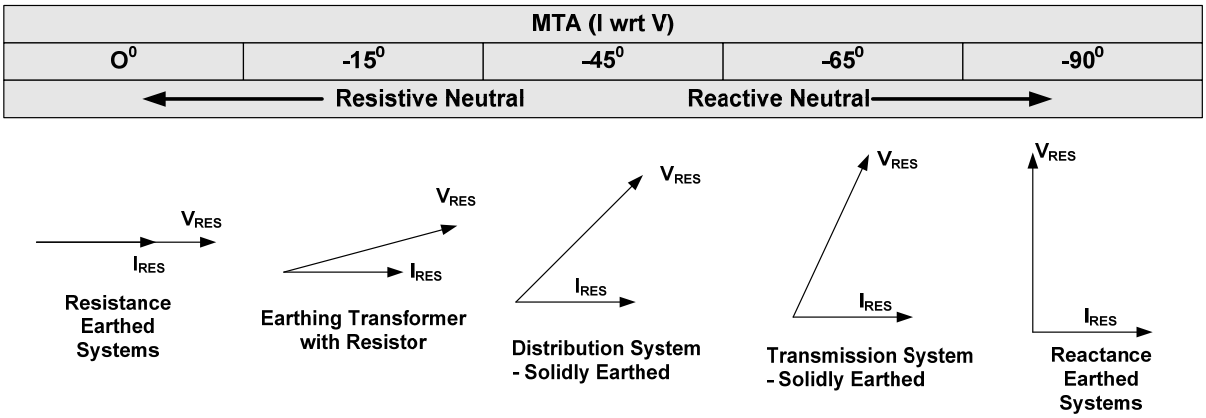

Figure 2.7-1 Earth Fault Angles

SIEMENS
siemens-russia.com

2.8 High Impedance Restricted Earth Fault Protection (64H)

Restricted Earth Fault (REF) protection is applied to Transformers to detect low level earth faults in the transformer windings. Current transformers are located on all connections to the transformer. During normal operation or external fault conditions no current will flow in the relay element. When an internal earth fault occurs, the currents in the CTs will not balance and the resulting unbalance flows through the relay.

The current transformers may saturate when carrying high levels of fault current. The high impedance name is derived from the fact that a resistor is added to the relay leg to prevent relay operation due to CT saturation under through fault conditions.

The REF Trip output is configured to provide an instantaneous trip output from the relay to minimise damage from developing winding faults.

The application of the element to a Argus RM-Star transformer is shown in Figure 2-5. Although the connection on the Argus RM winding is more correctly termed a Balanced Earth-Fault element, it is still usually referred to as Restricted Earth Fault because of the presence of the transformer.

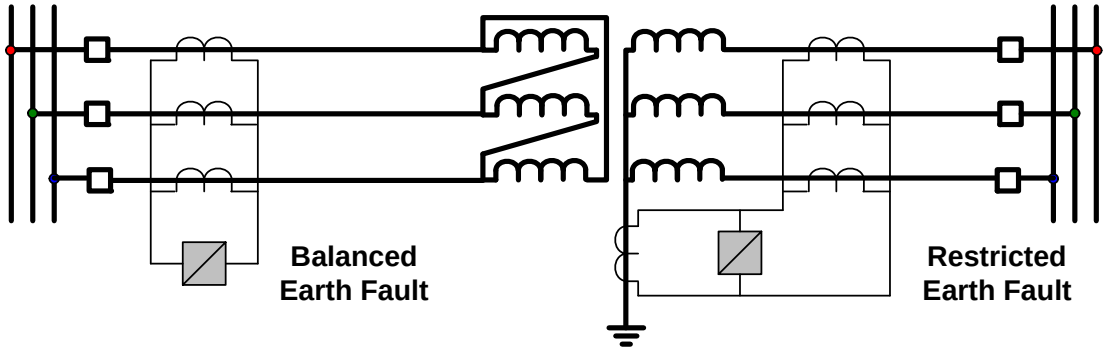

Figure 2.8-1 Balanced and Restricted Earth-fault protection of Transformers

The calculation of the value of the Stability Resistor is based on the worst case where one CT fully saturates and the other balancing CT does not saturate at all. A separate Siemens Protection Devices Limited Publication is available covering the calculation procedure for REF protection. To summarise this:

The relay Stability (operating) Vs voltage is calculated using worst case lead burden to avoid relay operation for through-fault conditions where one of the CTs may be fully saturated. The required fault setting (primary operate current) of the protection is chosen; typically, this is between 10 % and 25 % of the protected winding rated current. The relay setting current is calculated based on the secondary value of the operate current, note, however, that the summated CT magnetising current @ Vs must be subtracted to obtain the required relay operate current setting.

Since the relay operate current setting and stability/operating voltage are now known, a value for the series resistance can now be calculated.

A check is made as to whether a Non-Linear Resistor is required to limit scheme voltage during internal fault conditions – typically where the calculated voltage is in excess of 2kV.

The required thermal ratings for external circuit components are calculated.

©2011 Siemens Protection Devices Limited
SIEMENS
siemens-russia.com

Composite overcurrent and REF protection can be provided using a multi-element relay as.

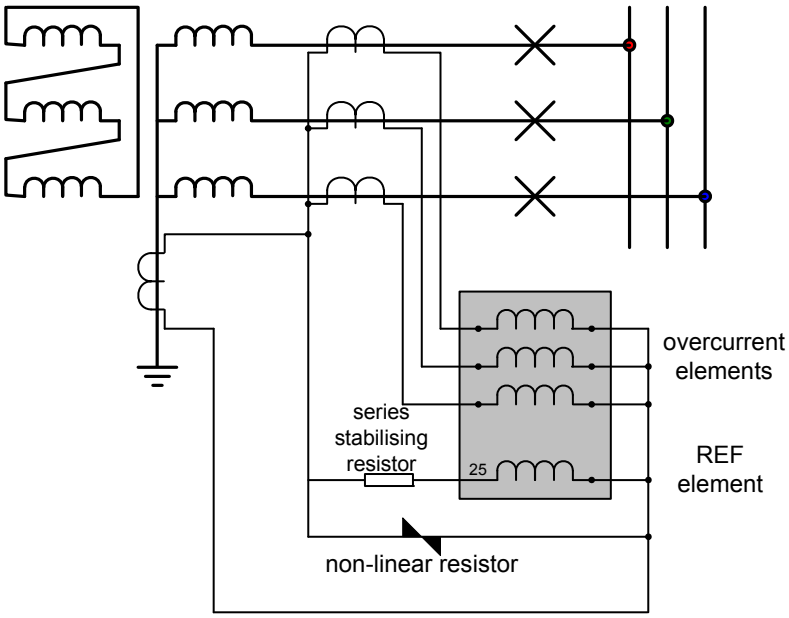

Figure 2.8-2 Composite Overcurrent and Restricted Earth-fault Protection

Although core-balance CTs are traditionally used with elements requiring sensitive pickup settings, cost and size usually precludes this on REF schemes. Instead single-Phase CTs are used and their secondary's connected in parallel.

Where sensitive settings are required, the setting must be above any line charging current levels that can be detected by the relay.

On occurrence of an out of zone earth fault the elevation of sound phase voltage to earth in a non-effectively earthed system can result in a zero sequence current of up 3 times phase charging current flowing through the relay location.

The step change from balanced 3-phase charging currents to this level of zero sequence current includes transients. It is recommended to allow for a transient factor of 2 to 3 when determining the limit of charging current. Based on the above considerations the minimum setting of a relay in a resistance earthed power system is 6 to 9 times the charging current per phase.

High impedance differential protection is suitable for application to auto transformers as line currents are in phase and the secondary current through the relay is balanced to zero by the use of CTs ratios at all three terminals. High impedance protection of this type is very sensitive and fast operating for internal faults.

©2011 Siemens Protection Devices Limited

SIEMENS
siemens-russia.com

2.9 Negative Phase Sequence Overcurrent (46NPS)

The presence of Negative Phase Sequence (NPS) current indicates an unbalance in the phase currents, either due to a fault or unbalanced load.

NPS current presents a major problem for 3-phase rotating plant. It produces a reaction magnetic field which rotates in the opposite direction, and at twice the frequency, to the main field created by the DC excitation system. This induces double-frequency currents into the rotor which cause very large eddy currents in the rotor body. The resulting heating of the rotor can be severe and is proportional to $(I_2)^2$ t.

Generators and Motors are designed, manufactured and tested to be capable of withstanding unbalanced current for specified limits. Their withstand is specified in two parts; continuous capability based on a figure of I_2, and short time capability based on a constant, K, where K = $(I_2)^2$ t. NPS overcurrent protection is therefore configured to match these two plant characteristics.

2.10 Undercurrent (37)

Undercurrent elements are used in control logic schemes such as Auto-Changeover Schemes, Auto-Switching Interlock and Loss of Load. They are used to indicate that current has ceased to flow or that a low load situation exists. For this reason simple Definite Time Lag (DTL) elements may be used.

For example, once it has been determined that fault current has been broken – the CB is open and no current flows – an auto-isolation sequence may safely be initiated.

2.11 Thermal Overload (49)

The element uses measured 3-phase current to estimate the real-time Thermal State, θ, of cables or transformers. The Thermal State is based on both past and present current levels.

θ = 0% for unheated equipment, and θ = 100% for maximum thermal withstand of equipment or the Trip threshold.

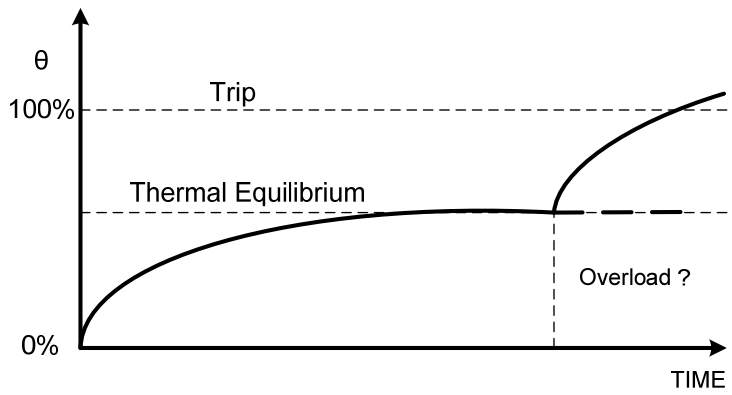

Figure 2.11-1 Thermal Overload Heating and Cooling Characteristic

For given current level, the Thermal State will ramp up over time until Thermal Equilibrium is reached when Heating Effects of Current = Thermal Losses.

The heating / cooling curve is primarily dependant upon the Thermal Time Constant. This must be matched against that quoted for the item of plant being protected. Similarly the current tripping threshold, I_θ, is related to the thermal withstand of the plant.

Thermal Overload is a slow acting protection, detecting faults or system conditions too small to pick-up fast acting protections such as Phase Overcurrent. An Alarm is provided for θ at or above a set % of capacity to indicate that a potential trip condition exists and that the system should be scrutinised for abnormalities.

©2011 Siemens Protection Devices Limited
SIEMENS
siemens-russia.com

2.12 Under/Over Voltage Protection (27/59)

Power system under-voltages on may occur due to:

System faults.

An increase in system loading,

Non-energized power system e.g. loss of an incoming transformer

During normal system operating conditions regulating equipment such as transformer On Load Tap Changers (OLTC) and generator Automatic Voltage Regulators (AVR) ensure that the system runs within acceptable voltage limits.

7SR24 undervoltage/DTL elements can be used to detect abnormal undervoltage conditions due to system overloads. Binary outputs can be used to trip non-essential loads - returning the system back to its normal operating levels. This 'load shedding' should be initiated via time delay elements so avoiding operation during transient disturbances. An under voltage scheme (or a combined under frequency/under voltage scheme) can provide faster tripping of non-essential loads than under-frequency load shedding so minimising the possibility of system instability.

Where a transformer is supplying 3-phase motors a significant voltage drop e.g. to below 80% may cause the motors to stall. An undervoltage element can be set to trip motor circuits when the voltage falls below a preset value so that on restoration of supply an overload is not caused by the simultaneous starting of all the motors. A time delay is required to ensure voltage dips due to remote system faults do not result in an unnecessary disconnection of motors.

To confirm presence/loss of supply, the voltage elements should be set to values safely above/below that where a normal system voltage excursion can be expected. The switchgear/plant design should be considered. The 'Dead' level may be very near to the 'live' level or may be significantly below it. The variable hysteresis setting allows the relay to be used with all types of switchgear.

System over-voltages can damage component insulation. Excessive voltage may occur for:

Sudden loss of load

A tap changer run-away condition occurs in the high voltage direction,

Generator AVR equipment malfunctions or

Reactive compensation control malfunctions.

System regulating equipment such as transformer tap changers and generator AVRs may correct the overvoltage – unless this equipment mal-functions. The overvoltage/DTL elements can be used to protect against damage caused by system overvoltages.

If the overvoltage condition is small a relatively long DTL time delay can be used. If the overvoltage is more severe then another element, set at a higher pickup level and with a shorter DTL can be used to isolate the circuit more quickly. Alternatively, elements can be set to provide alarm and tripping stages, with the alarm levels set lower than the tripping stages.

The use of DTL settings allows a grading system to be applied to co-ordinate the network design, the regulating plant design, system plant insulation withstand and with other overvoltage relays elsewhere on the system. The DTL also prevents operation during transient disturbances.

The use of IDMTL protection is not recommended because of the difficulty of choosing settings to ensure correct co-ordination and security of supply.

©2011 Siemens Protection Devices Limited

SIEMENS
siemens-russia.com

2.13 Neutral Overvoltage (59N)

Neutral Overvoltage Displacement (Residual Overvoltage) protection is used to detect an earth fault where little or no earth current flows.

This can occur where a feeder has been tripped at its HV side for an earth fault, but the circuit is still energised from the LV side via an unearthed transformer winding. Insufficient earth current would be present to cause a trip, but residual voltage would increase significantly; reaching up to 3-times the normal phase-earth voltage level.

If Neutral Overvoltage protection is used, it must be suitably time graded with other protections in order to prevent unwanted tripping for external system earth faults.

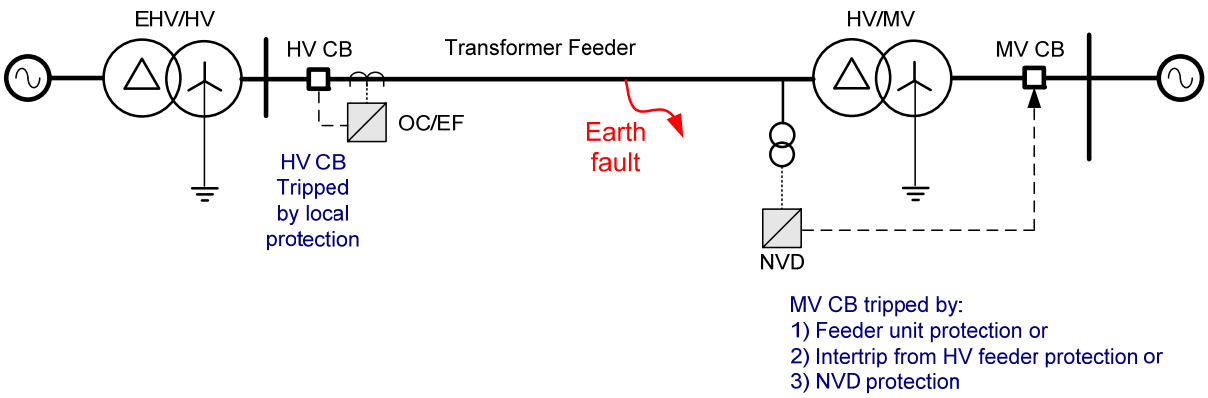

Figure 2.13-1 NVD Application

Typically NVD protection measures the residual voltage ($3V_0$) directly from an open delta VT or from capacitor cones – see fig. 2.13-2 below.

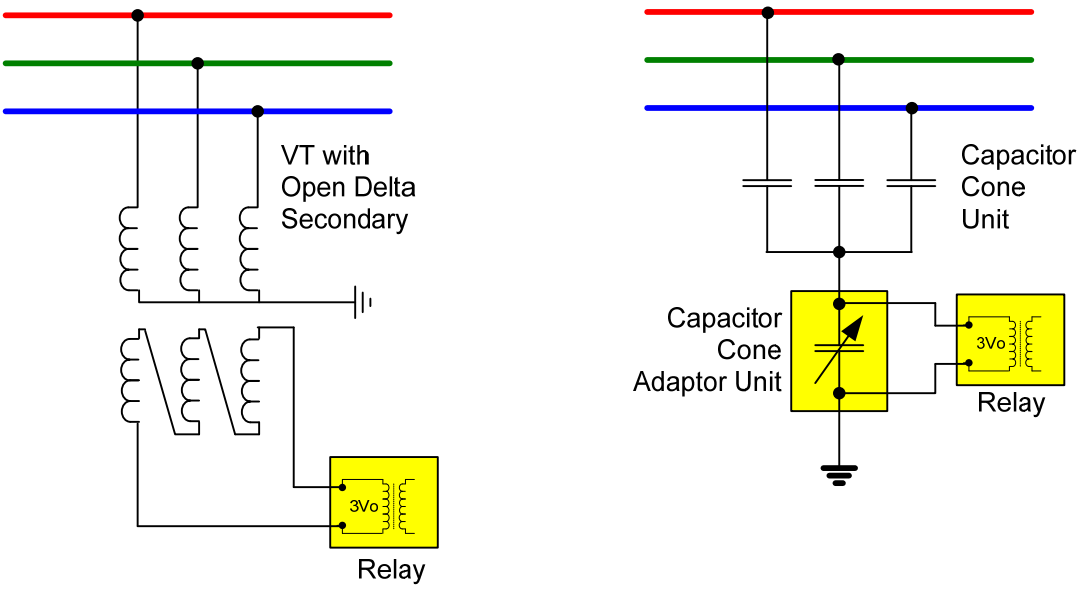

Figure 2.13-2 NVD Protection Connections

©2011 Siemens Protection Devices Limited
SIEMENS
siemens-russia.com

2.13.1 Application with Capacitor Cone Units

Capacitor cones provide a cost effective method of deriving residual voltage. The wide range of capacitor cone component values used by different manufacturer's means that the relay cannot be connected directly to the cones.

The external adaptor unit contains parallel switched capacitors that enable a wide range of values to be selected using a DIL switch and hence the Capacitor Cone output can be scaled to the standard relay input range.

2.13.2 Derived NVD Voltage

Alternatively NVD voltage can be derived from the three phase to neutral voltages, this setting is available within the relay. Note with this method the NVD protection may mal-operate during a VT Fail condition.

2.14 Negative Phase Sequence Overvoltage (47)

Negative Phase Sequence (NPS) protection detects phase unbalances and is widely used in protecting rotating plant such as motors and generators. However such protection is almost universally based on detecting NPS Current rather than Voltage. This is because the NPS impedance of motors etc. is much less than the Positive Phase Sequence (PPS) impedance and therefore the ratio of NPS to PPS Current is much higher than the equivalent ratio of NPS to PPS Voltage.

NPS Voltage is instead used for monitoring busbar supply quality rather than detecting system faults. The presence of NPS Voltage is due to unbalanced load on a system. Any system voltage abnormality is important since it will affect every motor connected to the source of supply and can result in mass failures in an industrial plant.

The two NPS Voltage DTL elements should therefore be used as Alarms to indicate that the level of NPS has reached abnormal levels. Remedial action can then be taken, such as introducing a Balancer network of capacitors and inductors. Very high levels of NPS Voltage indicate incorrect phase sequence due to an incorrect connection.

©2011 Siemens Protection Devices Limited

SIEMENS
siemens-russia.com

2.15 Under/Over Frequency (81)

During normal system operation the frequency will continuously vary over a relatively small range due to the changing generation/load balance. Excessive frequency variation may occur for:

Loss of generating capacity, or loss of mains supply (underfrequency): If the governors and other regulating equipment cannot respond to correct the balance, a sustained underfrequency condition may lead to a system collapse.

Loss of load – excess generation (overfrequency): The generator speeds will increase causing a proportional frequency rise. This may be unacceptable to industrial loads, for example, where the running speeds of synchronous motors will be affected.

In the situation where the system frequency is falling rapidly it is common practise to disconnect non-essential loads until the generation-load balance can be restored. Usually, automatic load shedding, based on underfrequency is implemented. Underfrequency relays are usually installed on the transformer incomers of distribution or industrial substations as this provides a convenient position from which to monitor the busbar frequency. Loads are disconnected from the busbar (shed) in stages until the frequency stabilises and returns to an acceptable level.

The relay has six under/over frequency elements.

An example scheme may have the first load shedding stage set just below the nominal frequency, e.g. between 49.0 - 49.5Hz. A time delay element would be associated with this to allow for transient dips in frequency and to provide a time for the system regulating equipment to respond. If the first load shedding stage disconnects sufficient plant the frequency will stabilise and perhaps return to nominal. If, however, this is not sufficient then a second load shedding stage, set at a lower frequency, will shed further loads until the overload is relieved. This process will continue until all stages have operated. In the event of the load shedding being unsuccessful, a final stage of underfrequency protection should be provided to totally isolate all loads before plant is damaged, e.g. due to overfluxing.

An alternative type of load shedding scheme would be to set all underfrequency stages to about the same frequency setting but to have different length time delays set on each stage. If after the first stage is shed the frequency doesn't recover then subsequent stages will shed after longer time delays have elapsed.

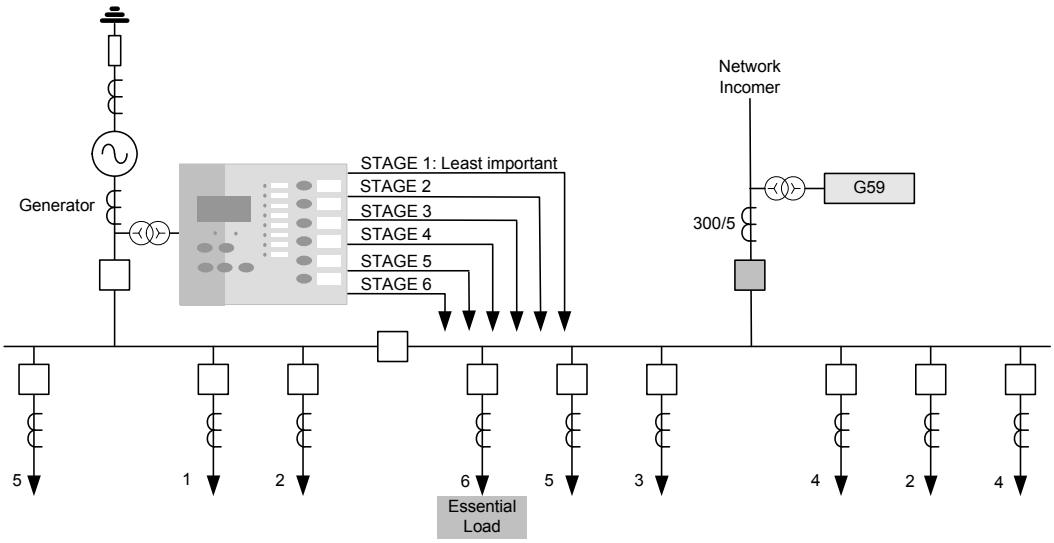

Figure 2.15-1 Load Shedding Scheme Using Under-Frequency Elements

©2011 Siemens Protection Devices Limited
SIEMENS
siemens-russia.com

Section 3: CT Requirements

3.1 CT Requirements for Overcurrent and Earth Fault Protection

3.1.1 Overcurrent Protection CTs

a) For industrial systems with relatively low fault current and no onerous grading requirements - a class 10P10 with VA rating to match the load.

b) For utility distribution networks with relatively high fault current and several grading stages - a class 5P20, with VA rating to match the load.

Note: if an accuracy limit factor is chosen which is much lower than the maximum fault current it will be necessary to consider any effect on the protection system performance and accuracy e.g. grading margins.

For i.d.m.t.l. applications, because the operating time at high fault current is a definite minimum value, partial saturation of the CT at values beyond the overcurrent factor has only a minimal effect. However, this must be taken into account in establishing the appropriate setting to ensure proper grading.

c) For dtl applications utilities as for (b) above - a class 5P10 (or 20), with rated burden to suit the load.

Note: Overcurrent factors do not need to be high for definite time protection because once the setting is exceeded magnitude accuracy is not important. Often, however, there is also the need to consider instantaneous HighSet overcurrent protection as part of the same protection system and the settings would normally be of the order of 10x the CT rating or higher. Where higher settings are to be used then the overcurrent factor must be raised accordingly, e.g. to P20.

3.1.2 Earth Fault Protection CTs

Considerations and requirements for earth fault protection are the same as for Phase fault. Usually the relay employs the same CT's e.g. three phase CTs star connected to derive the residual earth fault current.

The accuracy class and overcurrent accuracy limit factors are therefore already determined and for both these factors the earth fault protection requirements are normally less onerous than for overcurrent.

3.2 CT Requirements for High Impedance Restricted Earth Fault Protection

For high impedance REF it is recommended that:

Low reactance CTs to IEC 60044 Class PX are used, this allows a sensitive current setting to be applied.

All CT's should, if possible have identical turns ratios.

The knee point voltage of the CTs must be greater than 2 x 64H setting voltage Vs.

Where the REF function is used then this dictates that the other protection functions are also used with class PX CTs.

A full explanation of how to specify CTs for use with REF protection, and set REF relays is available on our website: www.siemens.com/energy

©2011 Siemens Protection Devices Limited

SIEMENS
siemens-russia.com

Section 4: Control Functions

4.1 Auto-reclose Applications

Automatic circuit reclosing is extensively applied to overhead line circuits where a high percentage of faults that occur are of a transient nature. By automatically reclosing the circuit-breaker the function attempts to minimise the loss of supply to the customer and reduce the need for manual intervention.

The function supports up to 4 ARC sequences. That is, 4 x Trip / Recloses followed by a Trip & Lockout. A lockout condition prevents any further attempts, automatic or manual, to close the circuit-breaker. The number of sequences selected depends upon the type of faults expected. If there are a sufficient percentage of semi-permanent faults which could be burnt away, e.g. fallen branches, a multi shot scheme would be appropriate. Alternatively, if there is a high likelihood of permanent faults, a single shot scheme would minimise the chances of causing damage by reclosing onto a fault. In general, 80% of faults will be cleared by a single Trip and Reclose sequence. A further 10% will be cleared by a second Trip and Reclose. Different sequences can be selected for different fault types (Phase/Earth/Sensitive Earth faults).

The Deadtime is the interval between the trip and the CB close pulse being issued. This is to allow for the line to go 'dead' after the fault is cleared. The delay chosen is a compromise between the need to return the line to service as soon as possible and prevented unnecessary trips through re-closing too soon. The Reclaim Time is the delay following a re-closure before the line can be considered back in service. This should be set long enough to allow for protection operation for the same fault, but not so long that two separate faults could occur in the same Autoreclose (ARC) sequence and cause unnecessary lockouts.

The Sequence Fail Timer provides an overall maximum time limit on the ARC operation. It should therefore be longer than all the set delays in a complete cycle of ARC sequences; trip delays, Deadtimes, Reclaim Time etc. Generally this will only be exceeded if the circuit-breaker has either failed to open or close.

Since large fault currents could potentially damage the system during a prolonged ARC sequence, there are also settings to identify which protection elements are High-sets and these can cause an early termination of the sequence.

Where a relay is to operate as part of an ARC scheme involving a number of other relays, the feature attempts to clear any faults quickly without regard to normal fault current grading. It does this by setting each Trip element to be either Delayed or Instantaneous. Instantaneous Trips are set to operate at just above maximum load current with small delays while Delayed Trips are set to suit actual fault levels and with delays suitable for current grading.

A typical sequence would be 2 Instantaneous Trips followed by a Delayed Trip & Lockout:

- When any fault occurs, the relay will trip instantaneously and then reclose.
- If this does not clear the fault, the relay will do the same again.
- If this still does not clear the fault, the fault is presumed to be permanent and the next Trip will be Delayed and so suitable for grading with the rest of the network. Thus allowing downstream protection time to operate.
- This Trip will Lockout the ARC sequence and prevent further recloses.

It is important that all the relays in an ARC scheme shadow this process – advancing through their own ARC sequences when a fault is detected by an element pickup even though they are not actually causing a trip or reclose. This is termed Sequence Co-ordination and prevents an excessive number of recloses as each successive relay attempts to clear the fault in isolation. For this reason each relay in an ARC scheme must be set with identical Instantaneous and Delayed sequence of trips.

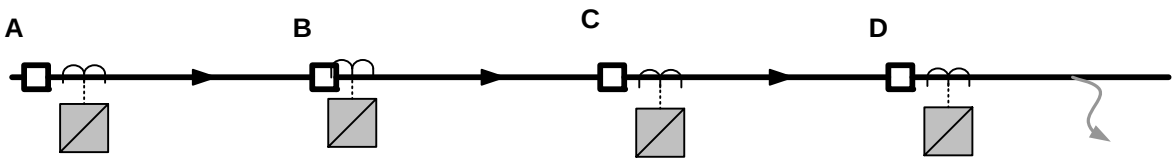

Figure 4.1-1 Sequence Co-ordination

©2011 Siemens Protection Devices Limited
SIEMENS
siemens-russia.com

The relay closest to the fault (D) would step through its Instantaneous Trips in an attempt to clear the fault. If unsuccessful, the relay would move to a Delayed Trip sequence.

The other relays in the network (A, B and C) would recognise the sequence of Pick-up followed by current switch-off as ARC sequences. They would therefore also step to their Delayed Trip to retain co-ordination with the respective downstream devices.

The next Trip would be subject to current grading and Lockout the ARC sequence such that the fault is cleared by the correct CB.

4.1.1 Auto-Reclose Example 1

Requirement: Settings shall provide four phase fault recloses – two instantaneous and two delayed - and only two recloses for faults detected by the SEF protection.

Proposed settings include:

CONTROL & LOGIC > AUTORECLOSE PROT'N:

***79 P/F Inst Trips*: 50-1**

***79 P/F Delayed Trips*: 51-1**

***79 SEF Delayed Trips*: 51SEF-1**

CONTROL & LOGIC > AUTORECLOSE CONFIG

***79 Num Shots*: 4**

CONTROL & LOGIC > AUTORECLOSE CONFIG > P/F SHOTS

***79 P/F Prot'n Trip 1* : Inst**

***79 P/F Prot'n Trip 2* : Inst**

***79 P/F Prot'n Trip 3* : Delayed**

***79 P/F Prot'n Trip 4* : Delayed**

***79 P/F Delayed Trips to Lockout* : 3**

CONTROL & LOGIC > AUTORECLOSE CONFIG > SEF SHOTS

***79 SEF Prot'n Trip 1* : Delayed**

***79 SEF Prot'n Trip 2* : Delayed**

***79 SEF Delayed Trips to Lockout* : 3**

Note that Instantaneous' shots are inhibited if the shot is defined as 'Delayed'

©2011 Siemens Protection Devices Limited

SIEMENS
siemens-russia.com

4.1.2 Auto-Reclose Example 2 (Use of Quicklogic with AR)

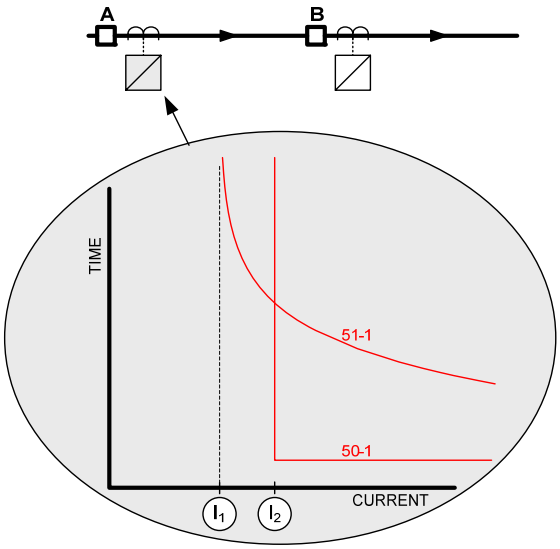

Figure 4.1-2 Example of Logic Application

Requirement: The relay at location 'A' it is required to provide a reclose sequence of 2 Instantaneous followed by 2 delayed recloses. Where the fault current level is between the values 'I1' and 'I2' and the first trip is initiated from the 51-1 (IDMT) element, the IDMT characteristic should trip the CB and lockout the auto-reclose.

Typical settings are:

CONTROL & LOGIC > AUTORECLOSE PROT'N:

***79 P/F Inst Trips*: 50-1**

***79 P/F Delayed Trips*: 51-1**

CONTROL & LOGIC > AUTORECLOSE CONFIG > P/F SHOTS

***79 P/F Prot'n Trip 1* : Inst**

***79 P/F Prot'n Trip 2* : Inst**

***79 P/F Prot'n Trip 3* : Delayed**

***79 P/F Prot'n Trip 4* : Delayed**

The above settings are suitable at values of fault current above 'I2' however were a fault to occur with a current value between 'I1' and 'I2' this would be detected by the 51-1 element only. As ***Prot'n Trip 1* = Inst** then the relay would trip and reclose whereas it is required to lockout for this occurrence.

To provide a lockout for the above faults an additional element 50-2 with identical settings to 50-1 is assigned as a Delayed Trip and is used in conjunction with the Quick Logic feature i.e.

OUTPUT CONFIG>OUTPUT MATRIX: ***51-1* = V1**

OUTPUT CONFIG>OUTPUT MATRIX: ***50-2* = V2**

OUTPUT CONFIG>OUTPUT MATRIX: ***E1* = V3**

CONTROL & LOGIC>QUICK LOGIC: ***E1* = V1.!V2**

INPUT CONFIG>INPUT MATRIX: ***79 Lockout* = V3**

©2011 Siemens Protection Devices Limited
SIEMENS
siemens-russia.com

4.2 Quick Logic Applications

4.2.1 Auto-Changeover Scheme Example

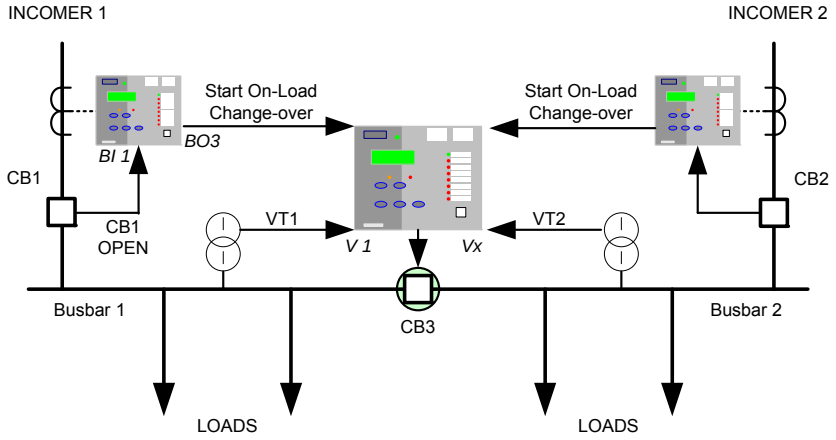

Figure 4.2-1 Example Use of Quick Logic

The MV installation illustrated above is fed from two incomers. To limit the substation fault level the busbar is run with CB3 open. When a fault occurs on one of the incomers it is isolated by the circuit protection. To re-supply the disconnected loads from the remaining incomer CB3 is closed.

If the line fault occurs on incomer 1 it must be confirmed that CB 1 has opened before CB3 can be closed. The relay on incomer 1 confirms that a trip has been issued to CB1 (e.g. Binary Output 2), that CB 1 has opened (e.g. Binary Input 1) and that no current flows in the circuit (e.g. 37-1 = Virtual 1):

<u>Incomer 1 Relay is Configured:</u>

CB1 Open auxiliary switch wired to B.I. 1

Trip output to CB1 = B.O. 2

OUTPUT CONFIG>OUTPUT MATRIX: ***37-1*** **= V1**

OUTPUT CONFIG>OUTPUT MATRIX: ***E1*** **= BO3**

CONTROL & LOGIC>QUICK LOGIC: ***E1*** **= O2.I1.V1**

The output from Incomer 1 (BO3) relay is input to the relay on CB 3 (Binary Input 1). A panel switch may be used to enable the On-Load Change-over scheme (Binary Input 2). Before Closing CB3 a check may be made that there is no voltage on busbar 1 (27/59-1 = Virtual 1). CB 3 is closed from Binary Output 3.

<u>CB3 Relay is Configured:</u>

Panel switch (ON-Load Change-over Enabled) wired to B.I. 1

OUTPUT CONFIG>OUTPUT MATRIX: ***27/59-1*** **= V1**

OUTPUT CONFIG>OUTPUT MATRIX: ***E1*** **= BO3**

CONTROL & LOGIC>QUICK LOGIC: ***E1*** **= I1.I2.V1**

If required a time delay can be added to the output using the CONTROL & LOGIC > QUICK LOGIC: ***E1 Pickup Delay*** setting.

SIEMENS
siemens-russia.com

Section 5: Supervision Functions

5.1 Circuit-Breaker Fail (50BF)

Where a circuit breaker fails to operate to clear fault current the power system will remain in a hazardous state until the fault is cleared by remote or back-up protections. To minimise any delay, CB Failure protection provides a signal to either re-trip the local CB or back-trip 'adjacent' CBs.

The function is initiated by the operation of user selectable protection functions or from a binary input. Current flow is monitored after a tripping signal has been issued if any of the 50BF current check elements have not reset before the timers have expired an output is given. For CB trips where the fault is not current related an additional input is provided (50BF Mech Trip) which monitors the CB closed input and provides an output if the circuit breaker has not opened before the timers expire.

The relay incorporates a two-stage circuit breaker fail feature. For some systems, only the first will be used and the CB Failure output will be used to back-trip the adjacent CB(s). On other systems, however, this output will be used to re-trip the local CB to minimise potential disruption to the system; if possible via a secondary trip coil and wiring. The second CB Failure stage will then be used to back-trip the adjacent CB(s).

If the CB is faulty and unable to open, a faulty contact can be wired to the CB faulty input of the relay and if a trip occurs while this input is raised the CB fail delay timers may be by-passed to allow back tripping to occur without delay.

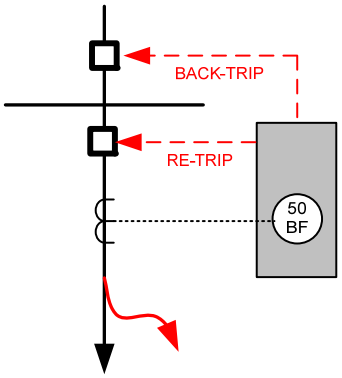

Figure 5.1-1 - Circuit Breaker Fail

5.1.1 Settings Guidelines

50BF Setting

The phase current setting must be set below the minimum protection setting current.

50BF Setting-I4

The EF or SEF current setting must be set below the minimum protection setting current.

50BF Ext Trig

Any binary input can be mapped to this input to trigger the circuit breaker fail function. Note current must be above setting for the function to operate.

50BF Mech Trip

Any binary input can be mapped to this input to trigger the circuit breaker fail function. Note for the function to operate the circuit breaker closed input is used to detect a failure, not the current.

50BF CB Faulty

Any binary input can be mapped to this input, if it is energised when a trip initiation is received an output will be given immediately (the timers are by passed).

©2011 Siemens Protection Devices Limited
SIEMENS
siemens-russia.com

50BF DTL1/50BF DTL2

The time delays run concurrently within the relay. The time delay applied to the CB Fail protection must be in excess of the longest CB operate time + relay reset time + a safety margin.

First Stage (Retrip)	
Trip Relay operate time	10ms
Reset Time	20ms
CB Tripping time	50ms
Safety Margin	40ms
Overall First Stage CBF Time Delay	**120ms**

Second Stage (Back Trip)	
First CBF Time Delay	120ms
Trip Relay operate time	10ms
CB Tripping time	50ms
Reset Time of measuring element	20ms
Margin	60ms
Overall Second Stage CBF Time Delay	**260ms**

The safety margin is extended by 1 cycle for the second CBF stage as this will usually involve a back-trip of a Busbar tripping scheme.

The timing sequence for each stage of the circuit breaker fail function is as below.

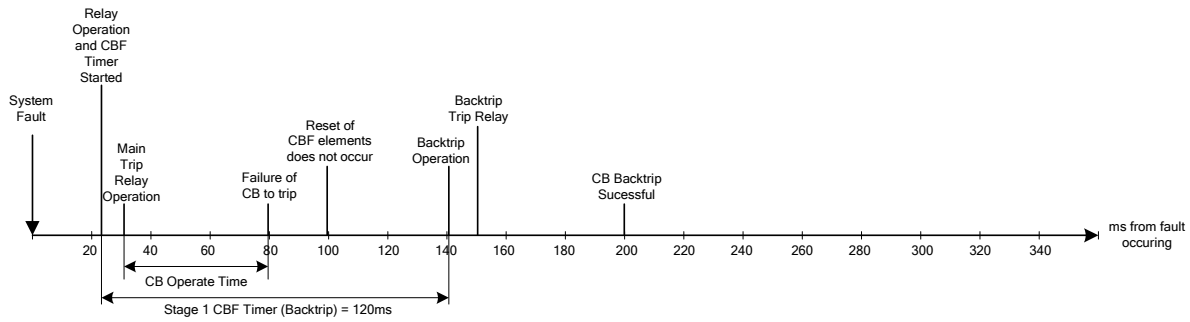

Figure 5.1-2 - Single Stage Circuit Breaker Fail Timing

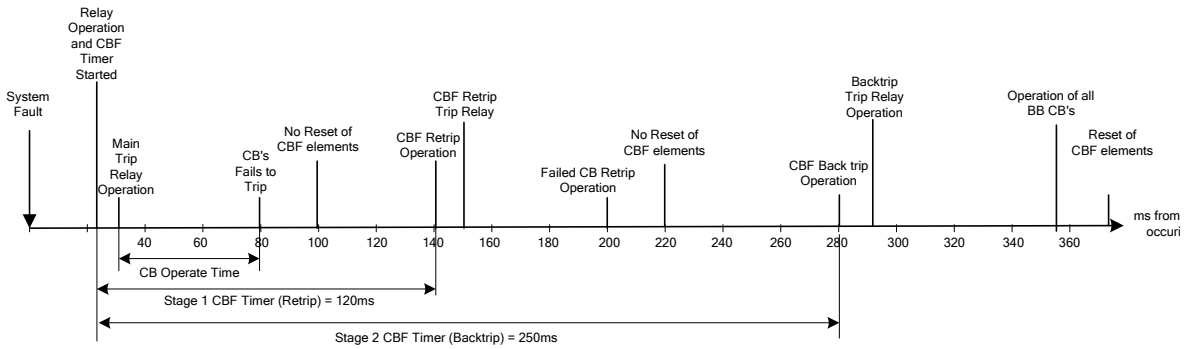

Figure 5.1-3 - Two Stage Circuit Breaker Fail Timing

SIEMENS
siemens-russia.com

5.2 Current Transformer Supervision (60CTS)

When a CT fails, the current levels seen by the protection become unbalanced. A large level of NPS current is therefore detected - around 0.3 x In for one or two CT failures. However this condition would also occur for a system fault. To differentiate between the two conditions, the element uses NPS voltage to restrain the CTS algorithm as show in the accompanying table.

NPS Current	NPS Voltage	Decision
> Setting	> Setting	System Fault
> Setting	< Setting	CT Failure

Table 5-2 Determination of CT Failure (1 or 2 Phases)

Following a CT Failure, there should be little or no NPS voltage. Perhaps 0.1 x Vn as a maximum.

Operation is subject to a time delay to prevent operation for transitory effects.

A 3-phase CT failure is considered so unlikely (these being independent units) that this condition is not tested for.

©2011 Siemens Protection Devices Limited
SIEMENS
siemens-russia.com

5.3 Voltage Transformer Supervision (60VTS)

Although VTs rarely fail themselves, VT Supervision presents a common application because of the failure of protective Fuses connected in series with the VTs.

When a VT failure occurs on one or two phases, the voltage levels seen by the protection become unbalanced. A large level of NPS voltage is therefore detected - around 0.3 x Vn for one or two VT failures. However this condition would also occur for a system fault. To differentiate between the two conditions, the element uses NPS current to restrain the VTS algorithm as show in the accompanying table.

NPS Voltage	NPS Current	Decision
> Setting	> Setting	System Fault
> Setting	< Setting	VT Failure

Table 5-3 Determination of VT Failure (1 or 2 Phases)

Following a VT Failure, the level of NPS current would be dependent solely upon load imbalance - perhaps 0.1 x In as a maximum.

Operation is subject to a time delay to prevent operation for transitory effects.

NPS voltage and current quantities are used rather than ZPS since the latter makes it difficult to differentiate between a VT failure and a Phase-Phase fault. Both conditions would generate little or no ZPS current. However the element provides an option to use ZPS quantities to meet some older specifications.

There are possible problems with using NPS quantities due to load imbalances. These would also generate significant levels of NPS current and so possibly cause a VT failure to be missed. This problem can be overcome by careful selection of settings, however, setting the NPS current threshold above the level expected for imbalance conditions.

If a failure occurs in all 3 Phases of a Voltage Transformer, then there will be no NPS or ZPS voltage to work with. However the PPS Voltage will fall below expected minimum measurement levels.

This could also be due to a ‘close in’ fault and so PPS Current must remain above minimum load level BUT below minimum fault level.

PPS Voltage	PPS Current	Decision
< Setting	> Minimum Fault Level	System Fault
< Setting	Minimum Load Level < AND < Minimum Fault Level	VT Failure

Table 5-4 Determination of VT Failure (3 Phases)

Operation is again subject to a time delay to prevent operation for transitory effects.

Alternatively a 3 Phase VT failure can be signalled to the relay via a Binary Input taken from the Trip output of an external MCB. This can also be reset by a Binary Input signal.

VTS would not normally be used for tripping - it is an alarm rather than fault condition. However the loss of a VT would cause problems for protection elements that have voltage dependant functionality. For this reason, the relay allows these protection elements - under-voltage, directional over-current, etc. - to be inhibited if a VT failure occurs.

©2011 Siemens Protection Devices Limited

SIEMENS
siemens-russia.com

5.4 Trip-Circuit Supervision (74TCS)

Binary Inputs may be used to monitor the integrity of the CB trip circuit wiring. A small current flows through the B.I. and the trip circuit. This current operates the B.I. confirming the integrity of the auxiliary supply, CB trip coil, auxiliary switch, C.B. secondary isolating contacts and associated wiring. If monitoring current flow ceases the B.I. drops off and if it is user programmed to operate one of the output relays, this can provide a remote alarm. In addition, an LED on the relay can be programmed to operate. A user text label can be used to define the operated LED e.g. "Trip CCT Fail".

The relevant Binary Input is mapped to 74TCS-n in the INPUT CONFIG>INPUT MATRIX menu. To avoid giving spurious alarm messages while the circuit breaker is operating the input is given a 0.4s Drop-off Delay in the INPUT CONFIG>BINARY INPUT CONFIG menu.

To provide an alarm output a normally open binary output is mapped to 74TCS-n.

5.4.1 Trip Circuit Supervision Connections

The following circuits are derived from UK ENA S15 standard schemes H5, H6 and H7.

For compliance with this standard:

> Where more than one device is used to trip the CB then connections should be looped between the tripping contacts. To ensure that all wiring is monitored the binary input must be at the end of the looped wiring.
>
> Resistors must be continuously rated and where possible should be of wire-wound construction.

Scheme 1 (Basic)

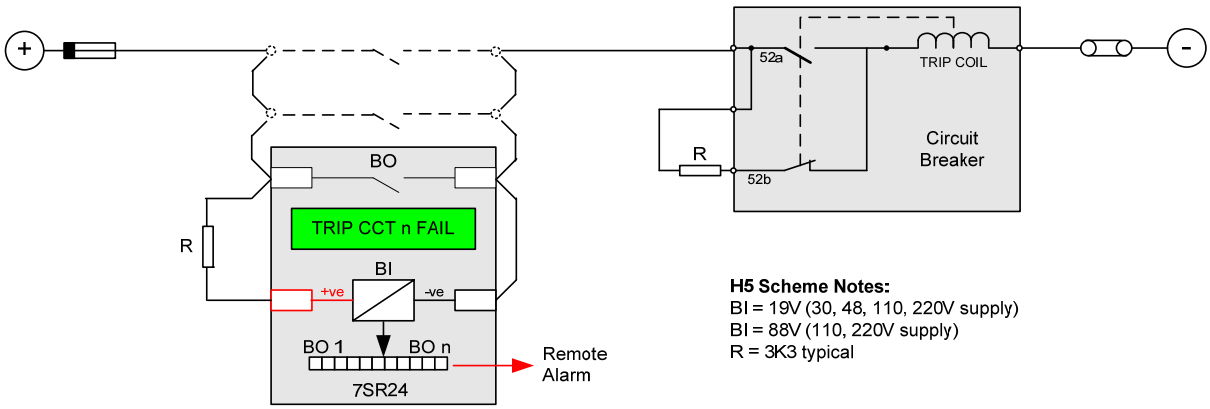

Figure 5.4-1: Trip Circuit Supervision Scheme 1 (H5)

Scheme 1 provides full Trip supervision with the circuit breaker Open or Closed.

Where a 'Hand Reset' Trip contact is used measures must be taken to inhibit alarm indications after a CB trip.

©2011 Siemens Protection Devices Limited
SIEMENS
siemens-russia.com

Scheme 2 (Intermediate)

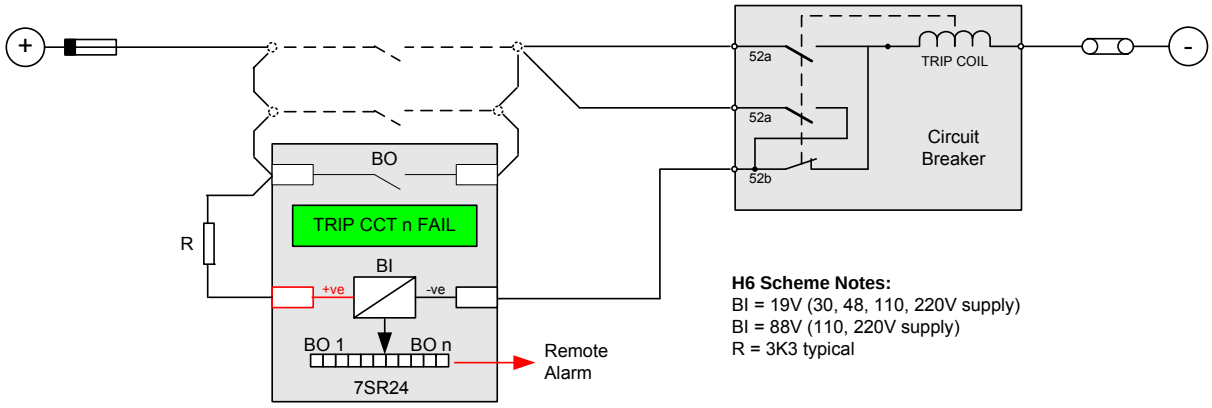

Figure 5.4-2: Trip Circuit Supervision Scheme 2 (H6)

Scheme 2 provides continuous Trip Circuit Supervision of trip coil with the circuit breaker Open or Closed. It does not provide pre-closing supervision of the connections and links between the tripping contacts and the circuit breaker and may not therefore be suitable for some circuits which include an isolating link.

Scheme 3 (Comprehensive)

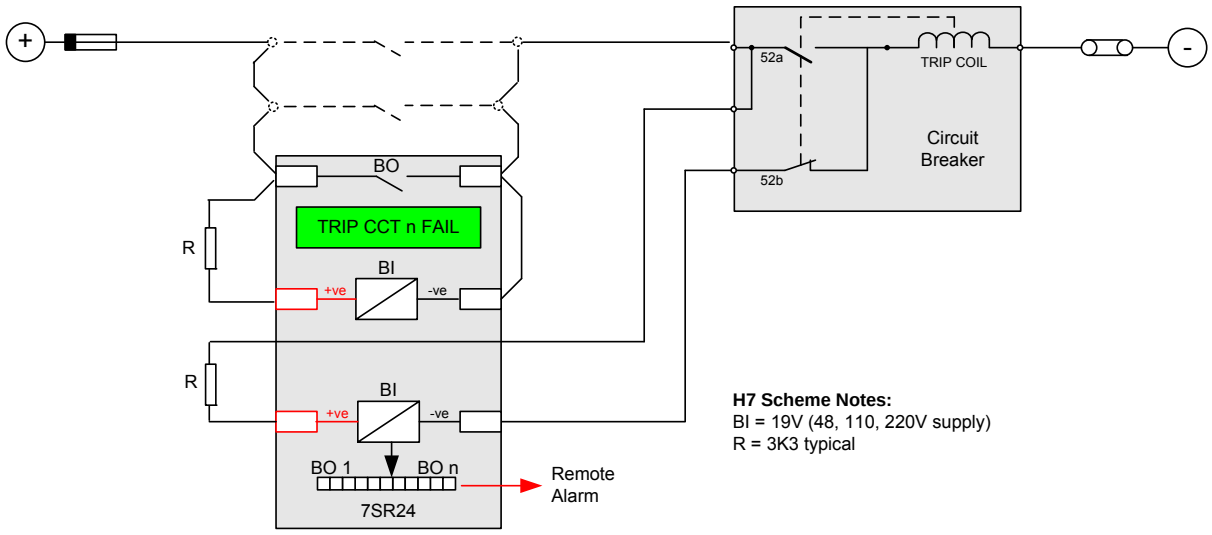

Figure 5.4-3: Trip Circuit Supervision Scheme 3 (H7)

Scheme 3 provides full Trip supervision with the circuit breaker Open or Closed.

SIEMENS
siemens-russia.com

5.5 Inrush Detector (81HBL2)

This element detects the presence of high levels of 2nd Harmonic current which is indicative of transformer Inrush current at switch-on. These currents may be above the operate level of the overcurrent elements for a short duration and it is important that the relay does not issue an incorrect trip command for this transient network condition.

If a magnetic inrush condition is detected operation of the overcurrent elements can be blocked.

Calculation of the magnetising inrush current level is complex. However a ratio of 20% 2nd Harmonic to Fundamental current will meet most applications without compromising the integrity of the Overcurrent protection.

There are 3 methods of detection and blocking during the passage of magnetising inrush current.

Phase	Blocking only occurs in those phases where Inrush is detected. Large, Single Phase Transformers – Auto-transformers.
Cross	All 3-phases are blocked if Inrush is detected in any phase. Traditional application for most Transformers but can give delayed operation for Switch-on to Earth Fault conditions.
Sum	Composite 2nd Harmonic content derived for all 3-phases and then compared to Fundamental current for each individual phase. Provides good compromise between Inrush stability and fast fault detection.

Table 5-5 Magnetic Inrush Bias

5.6 Broken Conductor / Load Imbalance (46BC)

This feature is used to detect an open circuit condition when a conductor breaks or a mal-operation occurs in phase segregated switchgear.

There will be little or no fault current and so overcurrent elements will not detect the condition. However the condition can be detected because there will be a high content of NPS (unbalance) current present.

An NPS / PPS ratio > 50% will result from a Broken Conductor condition.

Operation is subject to a time delay to prevent operation for transitory effects.

5.7 Circuit-Breaker Maintenance

The Relay provides CB Total Trip Count, CB Delta Trip Count, CB Count to AR Block and CB Frequent Operation Counters along with an I^2t CB Wear Counter to estimate the amount of wear and tear experienced by a Circuit-Breaker. Alarm can be provided once set levels have been exceeded.

Typically estimates obtained from previous circuit-breaker maintenance schedules or manufacturers data sheets are used for setting these alarm levels. The relay instrumentation provides the current values of these counters.

©2011 Siemens Protection Devices Limited
SIEMENS
siemens-russia.com